Instruction Manual Book

Item code:175A

VIPER JET MKII

Glow and EP

95% PRE BUILT ARF ALMOST READY TO FLY



ALL BALSA - PLY WOOD CONSTRUCTION
COVERED IN A HEAT-SHRINK FILM WITH PRINTED.
INCLUDING ELECTRIC RETRACT GEAR
ONLY INCLUDING CNC SUSPENSION METAL STRUTS.

95% ALMOST READY TO FLY

SPECIFICATION:

- Wingspan: 1,885mm (74.21 in).
- Length: 1,820mm (71.65 in).
- Weight: 8.9 - 9.1kg (19.58 - 20 lbs).
- Wing area: 62.2dm^2.
- Wing loading:143.1g/dm^2.
- Wing type: Naca Airfoil.
- Gear type: Electric Retract Gear (included) with controller box (included).

Recommended EDF and Battery set up (not included):

- Engine: Ducted Fan EDF JETFAN-120 eco Ejets+ HET 800-68-685.
- Battery: 12S LIPO – 44.4 V ≥ 6000mAh 40C.
- Or Engine: Ducted Fan EDF Schubeler DS-86-AXI HDS 120mm + TP 5660-9D motor.
- Battery: 10S LIPO - 37V ≥ 6000mAh 40C.
- ESC: 160A Phoenix Castle.

Parts listing required (not included):

- Radio: 8 channels minimum.
- Servo: 8 standard high torque servos, size: (33 x 17)mm.
- Engine: EDF 120mm.
- Battery: 10S - 12S LIPO 37V- 44.4 V.
- ESC: 160A.

Made in Vietnam.

TABLE OF CONTENTS

- Introduction.....2
- Warranty.....3
- Disclaimer.....3
- Safety precaution.....3
- Important building notes.....3
- Suggestion.....3
- Flight warnings.....3
- Covering tools.....4
- Adhesives and required tools.....4
- Academy of Model Aeronautics National Model Aircraft Safety Code.....4
- Parts listing (not included).....6
- Tools & supplies needed.....6
- Symbols used throughout this instruction manual comprise.....6
- Preparations.....8
- Installing the ailerons and flaps.....8
- Installing the aileron and flap servo.....9
- Installing the aileron and flap linkages.....11
- Installing main gear.....13
- Electric gear retracts.....14
- Installing horizontal stabilizer.....19
- Installing the horizontal stabilizer servo.....20
- Installing the horizontal stabilizer linkages.....23
- Installing the vertical stabilizer.....26
- Installing the vertical stabilizer servo.....27
- Installing the vertical stabilizer linkages.....29
- Installing the nose gear retract.....33
- Installing the edf and lip of air inlet and outlet.....38
- Secure the wing to the fuselage..... .44
- Installing the receiver and battery.....47
- Installing the swith.....47
- Installing cockpit fuselage.....48
- Balacing.....50
- Lateral balance.....50
- Control throws.....52
- Flight preparation pre flight check.....52
- For your radio installation Basic connection for airplane And adjustment of servos.....53
- Main gear dimensional detail.....54
- Decoration.....55
- Exploded view.....56

INTRODUCTION

Thank you for purchasing Black Horse Model products. With over 18 years experience in production and fly testing, Black Horse Model is committed to bring the best quality products and good service to customers. Along with a team of creative engineers and skilled workers, we will always accompany with customers by our great experiences, fully enthusiasm... which will burn our passion!! Joining with us to explore and conquer challenges in the sky ...

Your satisfaction is our success. Please read through this manual before starting construction.

Academy of Model Aeronautics: If you are not already a member of the AMA, please join! The AMA is the governing body of model aviation and membership provides liability insurance coverage, protects modelers' rights and interests and is required to fly at most R/C sites.

Academy of ModelAeronautics
5151 East Memorial Drive Muncie IN 47302-9252

Tele. (800) 435-9262
Fax. (765) 741-0057

Or via the Internet at: http://www.modelaircraft.org

AMA
SINCE 1939

WARRANTY

Black Horse Model guarantees the component parts in this kit to be free from defects in both material and workmanship at the date of purchase by the purchaser.

This warranty does not cover cosmetic damage or damage due to acts of God, accident, misuse, abuse, negligence, commercial use, or modification of or to any part of the Product.

This warranty does not cover damage due to improper installation, operation, maintenance, or attempted repair by anyone other than Black Horse Model.

Further, Black Horse Model reserves the right to change or modify this warranty without notice.

DISCLAIMER

Read this disclaimer carefully before using this product. Please strictly follow the instruction manual to assemble and use this.

In that Black Horse Model has no control over the final assembly or material used for final assembly, Black Horse Model is not responsible for loss of use , or other incidental or consequential damages.

Furthermore, Black Horse Model cannot be held liable for personal injury or property damage caused by the use or misuse of Black Horse Model products. By the act of using the user-assembled products, the user accepts all resulting liability.

SAFETY PRECAUTION

- This is not a toy and pilots must be over the age of 14
- Be sure that no other flyers are using your radio frequency.
- Do not smoke near fuel
- Store fuel in a cool, dry place, away from children and pets.
- Wear safety glasses.
- The glow plug clip must be securely attached to the glow plug.
- Do not flip the propeller with your fingers.
- Keep loose clothing and wires away from the propeller.
- Do not start the engine if people are near. Do not stand in line with the side of the propeller.
- Make engine adjustments from behind the propeller only. Do not reach around the spinning propeller.
- Moisture causes damage to electronics. Avoid water exposure to all equipment not specifically designed and protected for this purpose.

IMPORTANT BUILDING NOTES

- Please trial fit all the parts. Make sure you have the correct parts and that they fit and are aligned properly before gluing! This will assure proper assembly. This kit is hand made from natural materials, every plane is unique and minor adjustments may have to be made. However, you should find the fit superior and assembly simple.

- The painted and plastic parts used in this kit are fuel proof. However, they are not tolerant of many harsh chemicals including the following: paint thinner, C/A glue accelerator, C/A glue debonder and acetone. Do not let these chemicals come in contact with the colors on the covering and the plastic parts.

- Some parts included in this kit such as the cowl or wheel pants are made of fiberglass, the fibers of which may cause eye, skin and respiratory tract irritation. Never blow into a part to remove fiberglass dust, as the dust will blow back into your eyes. Always wear safety goggles, a particle mask and rubber gloves when grinding, drilling and sanding fiberglass parts. Vacuum the parts and the work area thoroughly after working with fiberglass parts.

SUGGESTION

To avoid scratching your new airplane, do not unwrap the pieces until they are needed for assembly. Cover your workbench with an old towel or brown paper, both to protect the aircraft and to protect the table. Keep a couple of jars or bowls handy to hold the small parts after you open the bag.

FLIGHT WARNINGS

- Always operate in open areas, away from factories, hospitals, schools, buildings and houses etc.
- NEVER fly your aircraft close to people or built up areas.
- NEVER fly near power lines, aerials or other dangerous areas including airports, motorways etc.
- NEVER fly in wet conditions or on windy or stormy days.
- ALWAYS adjust the engine from behind the propeller, and do not allow any part of your body to be in line with the propeller.
- THE PROPELLER IS DANGEROUS Keep fingers, clothing (ties, shirt sleeves, scarves) or any other loose objects that could be caught or drawn in, away from the propeller. Take care at ALL times.
- NEVER use damaged or deformed propellers or spinners.
- Keep all onlookers (especially small children and animals) well back from the area of operation. This is a flying aircraft, which will cause serious injury in case of impact with a person or animal.
- DO NOT dispose of empty fuel containers on a fire, this can lead to an explosion.

FLIGHT WARNINGS

- When ready to fly, first extend the transmitter aerial.
- Switch on the transmitter.
- Switch on the receiver.
- Check that the wings are correctly fitted to the fuselage.
- Operate the control sticks on the transmitter and check that the control surfaces move freely and in the CORRECT directions.
- Check that the transmitter batteries have adequate power.
- ALWAYS take off into the wind.
- If the model does not respond correctly to the controls, land it as soon as possible and correct the fault.
- ALWAYS land the model INTO the wind, this ensures that the model lands at the slowest possible speed.
- Switch off the receiver.
- Switch off the transmitter.
- Empty the fuel tank after flying, fuel left in the tank can cause corrosion and lead to engine problems.

COVERING TOOLS

- Top Flite® MonoKote® Sealing Iron
- Top Flite Hot Sock Iron Cover
- Top Flite MonoKote Trim Seal Iron
- Top Flite MonoKote Heat Gun

ADHESIVES AND REQUIRED TOOLS

- Thin CA
- 30-minute epoxy
- 6-minute epoxy
- Threadlocker thread locking cement
- Mixing sticks
- Mixing cups (GPMR8056)
- Epoxy brushes
- Denatured alcohol
- Canopy Glue
- Felt-tipped pen or pencil
- Flat screwdriver
- Adjustable wrench
- Drill
- Hobby knife
- Masking tape
- Phillips screwdriver (large)
- Phillips screwdriver (small)
- Ruler
- Sandpaper
- Soldering iron
- Solder
- Hex wrench
- Drill bit: 1/16-inch (1.5mm), 5/64-inch (2mm), 1/8-inch (3,2mm), 3/16-inch (4,8mm),11/64-inch (4.5mm), 13/64-inch (5,2mm), 1/4-inch (6,4mm)

Academy of Model Aeronautics National Model Aircraft Safety Code

Effective January 1, 2018

A. GENERAL: A model aircraft is a non-human-carrying device capable of sustained flight within visual line of sight of the pilot or spotter(s). It may not exceed limitations of this code and is intended exclusively for sport, recreation, education and/or competition. All model flights must be conducted in accordance with this safety code and related AMA guidelines, any additional rules specific to the flying site, as well as all applicable laws and regulations.

As an AMA member I agree:

• I will not fly a model aircraft in a careless or reckless manner.

• I will not interfere with and will yield the right of way to all human-carrying aircraft using AMA's See and Avoid Guidance and a spotter when appropriate.

• I will not operate any model aircraft while I am under the influence of alcohol or any drug that could adversely affect my ability to safely control the model.

• I will avoid flying directly over unprotected people, moving vehicles, and occupied structures.

• I will fly Free Flight (FF) and Control Line (CL) models in compliance with AMA's safety programming.

• I will maintain visual contact of an RC model aircraft without enhancement other than corrective lenses prescribed to me. When using an advanced flight system, such as an autopilot, or flying First-Person View (FPV), I will comply with AMA's Advanced Flight System programming.

• I will only fly models weighing more than 55 pounds, including fuel, if certified through AMA's Large Model Airplane Program.

• I will only fly a turbine-powered model aircraft in compliance with AMA's Gas Turbine Program.

• I will not fly a powered model outdoors closer than 25 feet to any individual, except for myself or my helper(s) located at the flightline, unless I am taking off and landing, or as otherwise provided in AMA's Competition Regulation.

• I will use an established safety line to separate all model aircraft operations from spectators and bystanders.

- Officially designated AMA Air Show Teams (AST) are authorized to use devices and practices as defined within the Team AMA Program Document. (AMA Document #718.)

(j) Not operate a turbine-powered aircraft, unless in compliance with the AMA turbine regulations. (AMA Document #510-A.)

3. Model aircraft will not be flown in AMA sanctioned events, air shows or model demonstrations unless:

(a) The aircraft, control system and pilot skills have successfully demonstrated all maneuvers intended or anticipated prior to the specific event.

(b) An inexperienced pilot is assisted by an experienced pilot.

4. When and where required by rule, helmets must be properly worn and fastened. They must be OSHA, DOT, ANSI, SNELL or NOCSAE approved or comply with comparable standards.

B. RADIO CONTROL (RC)

1. All pilots shall avoid flying directly over unprotected people, vessels, vehicles or structures and shall avoid endangerment of life and property of others.
2. A successful radio equipment ground-range check in accordance with manufacturer's recommendations will be completed before the first flight of a new or repaired model aircraft.
3. At all flying sites a safety line(s) must be established in front of which all flying takes place. (AMA Document #706.)

(a) Only personnel associated with flying the model aircraft are allowed at or in front of the safety line.

(b) At air shows or demonstrations, a straight safety line must be established.

(c) An area away from the safety line must be maintained for spectators.

(d) Intentional flying behind the safety line is prohibited.

4. RC model aircraft must use the radio-control frequencies currently allowed by the Federal Communications Commission (FCC). Only individuals properly licensed by the FCC are authorized to operate equipment on Amateur Band frequencies.
5. RC model aircraft will not knowingly operate within three (3) miles of any pre-existing flying site without a frequency-management agreement. (AMA Documents #922 and #923.)
6. With the exception of events flown under official AMA Competition Regulations, excluding takeoff and landing, no powered model may be flown outdoors closer than 25 feet to any individual, except for the pilot and the pilot's helper(s) located at the flightline.
7. Under no circumstances may a pilot or other person touch an outdoor model aircraft in flight while it is still under power, except to divert it from striking an individual.
8. RC night flying requires a lighting system providing the pilot with a clear view of the model's attitude and orientation at all times. Hand-held illumination systems are inadequate for night flying operations.
9. The pilot of an RC model aircraft shall:

(a) Maintain control during the entire flight, maintaining visual contact without enhancement other than by corrective lenses prescribed for the pilot.

(b) Fly using the assistance of a camera or First-Person View (FPV) only in accordance with the procedures outlined in AMA Document #550.

(c) Fly using the assistance of autopilot or stabilization system only in accordance with the procedures outlined in AMA Document #560.

C. FREE FLIGHT

1. Must be at least 100 feet downwind of spectators and automobile parking when the model aircraft is launched.
2. Launch area must be clear of all individuals except mechanics, officials, and other fliers.
3. An effective device will be used to extinguish any fuse on the model aircraft after the fuse has completed its function.

D. CONTROL LINE

1. The complete control system (including the safety thong where applicable) must have an inspection and pull test prior to flying.
2. The pull test will be in accordance with the current Competition Regulations for the applicable model aircraft category.
3. Model aircraft not fitting a specific category shall use those pull-test requirements as indicated for Control Line Precision Aerobatics.
4. The flying area must be clear of all utility wires or poles and a model aircraft will not be flown closer than 50 feet to any above-ground electric utility lines.
5. The flying area must be clear of all nonessential participants and spectators before the engine is started.

PARTS LISTING (NOT INCLUDED).

Servo extension leads.

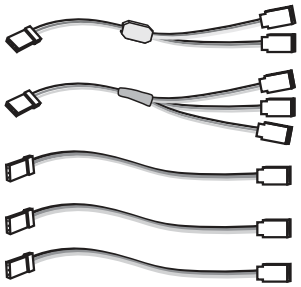

..... 2 pcs.

..... 1 pcs.

720mm ..... 3 pcs.

330mm ..... 2 pcs.

190mm ..... 8 pcs.

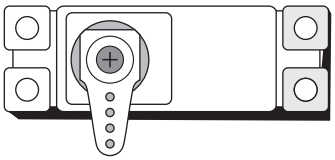

Servos size: (32.3x16.8x31)mm.
Torque: 4.8V(3.89kg-cm), 6V(4.82 kg-cm).... 6pcs



ESC: 160A 1pcs

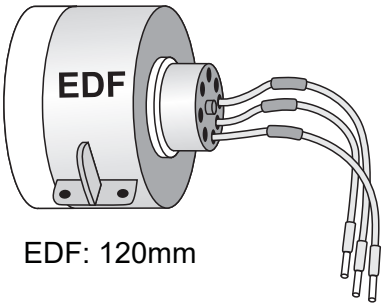

EDF: 120mm

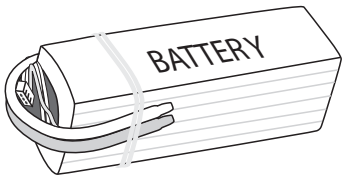

LiPo: 4 Cell .....2 Packs

LiPo: 6 Cell .....2 Packs

TOOLS & SUPPLIES NEEDED



Medium C/A glue



Threadlocker (screw cement).

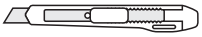

Modeling knife.

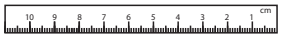

Straight edge ruler.

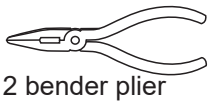

2 bender plier



Wire cutters.





30 minute epoxy.
5 minute epoxy.

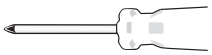

Screw driver





Hex Wrench.



Hand or electric drill.

Some more tools.

- Assorted drill bits.
- Masking tape.
- Paper towels.
- Rubbing alcohol
- 90° square or builder's triangle.

Symbols used throughout this instruction manual, comprise:



Cut off excess.



Cut off shaded portion carefully.



Pay close attention here.



Take particular care here.



► Set all scerws securely. If they come off during flight you will lose control of your aircraft!



Apply threadlocker (screw cement).



Apply instant glue (C.A glue, super glue).



Apply epoxy glue.



Assemble left and right sides the same way.



Must be purchased separately!



Ensure smooth, non-binding movement when assembling.



Drill holes using the stated. (in this case 1.5mm Ø).



The number of times the same way Assembly (in this case twice).

❶ : Fuselage.
❷ : Wing panel (2a, 2b).
❸ : Horizontal stabilizer (3a, 3b).
❹ : Vertical stabilizer.
❺ : Aluminium wing dihedral brace.
❻ : Aluminium tube horizontal stabilizer.
❼ : Aluminium tube vertical stabilizer.
❽ : Cockpit fuselage (8a: Canopy, 8b: Pilot, 8c: Cockpit).
❾ : Wing tip (9a,9b).
❿ : Plastic air intake (10a, 10b).
⓫ : Fiberglass air outflow.

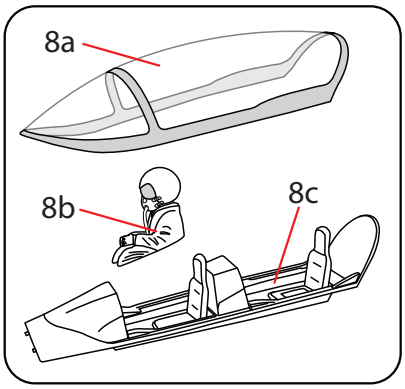

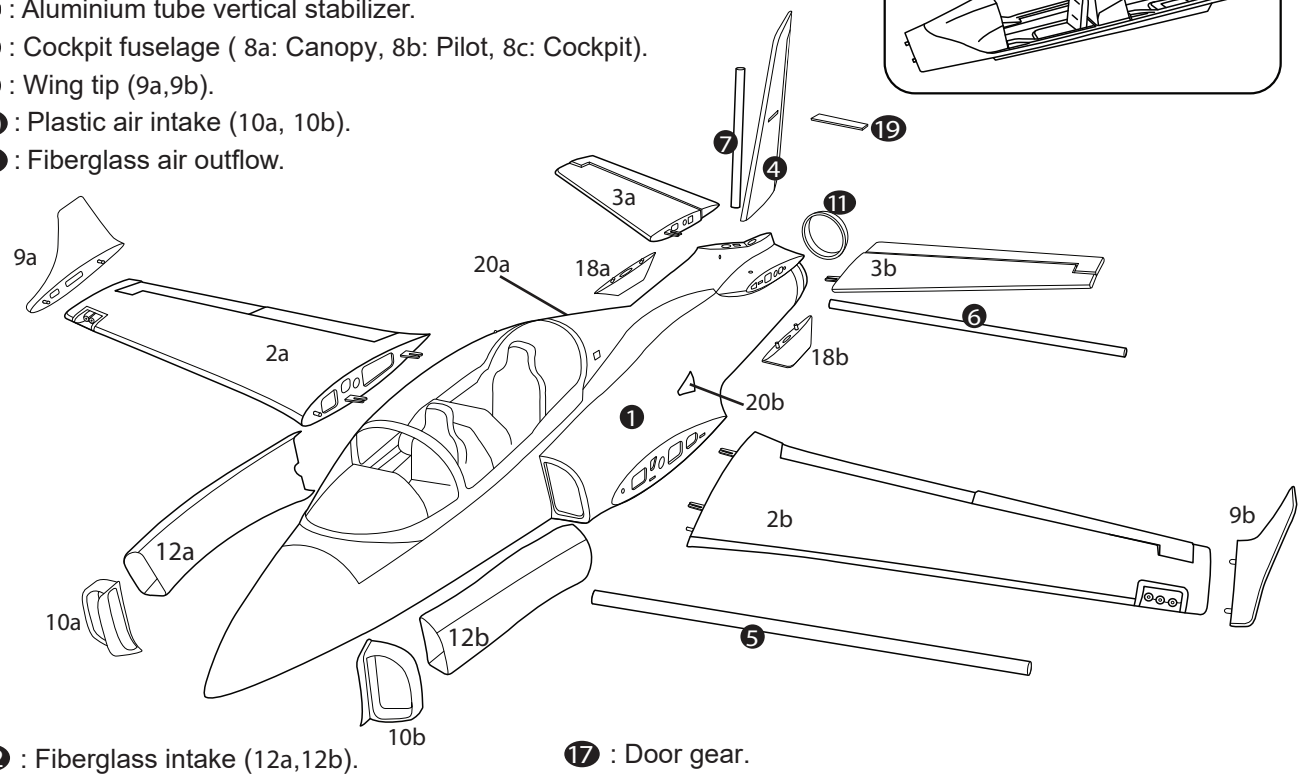

⓬ : Fiberglass intake (12a,12b).
⓭ : Wheel well (13a, 13b, 13c).
⓮ : Main gear struts (14a, 14b).
⓯ : Nose gear truts.
⓰ : Wheels (16a, 16b).

⓱ : Door gear.
⓲ : Ply Wood part for the rear bottom fuselage (18a, 18b).
⓳ : Ply Wood part for rudder stab.
⓴ : Plastic air intake for cooling ESC (20a, 20b).
㉑ : Controller box.

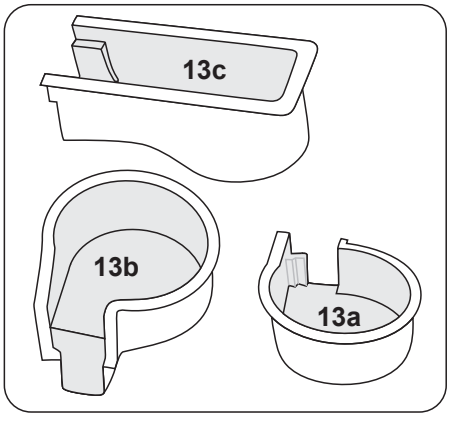

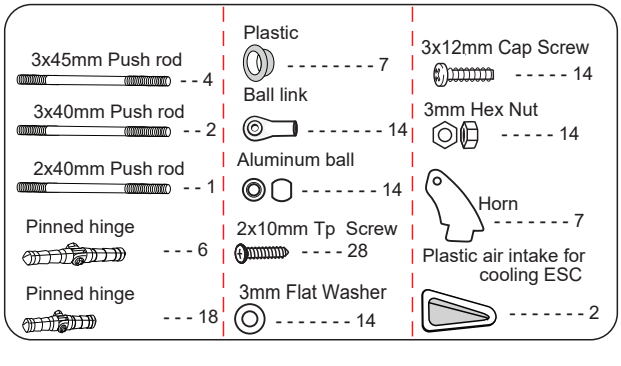

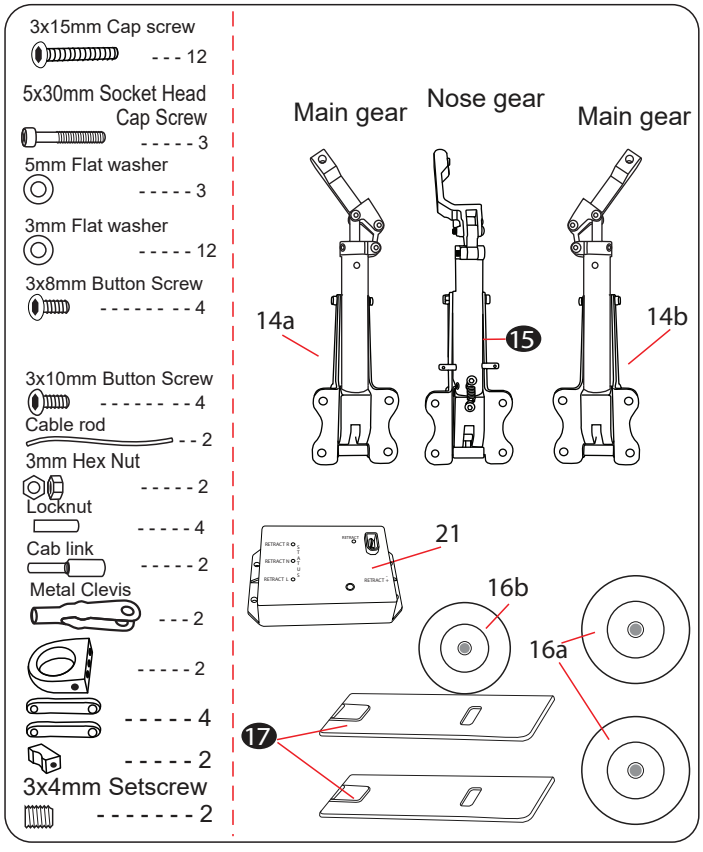

INSTALLING THE AILERONS AND FLAPS

Pinned hinge

 ---------- 6

 ---------- 6

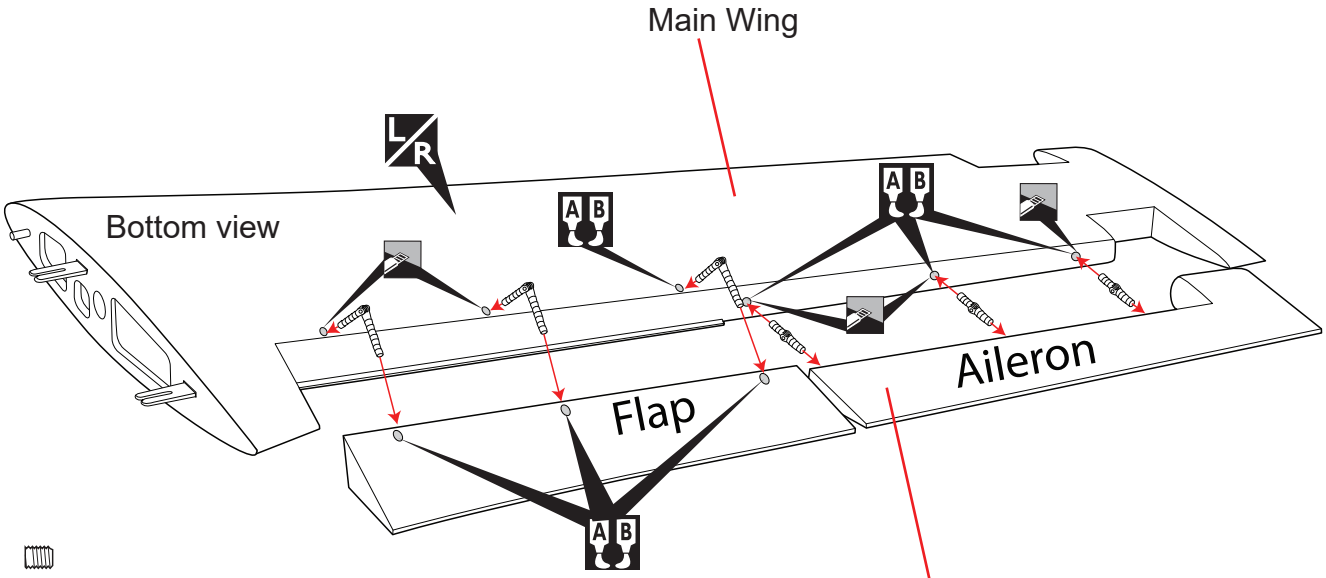

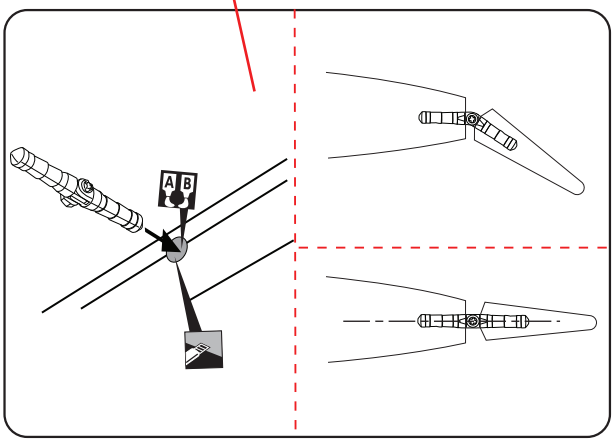

Warning!

► Make certain the hinges are adequately secured with glue. If they come loose in flight accidents may result.

Assemble left and right sides the same way.

Apply epoxy glue

Cut off shaded portion

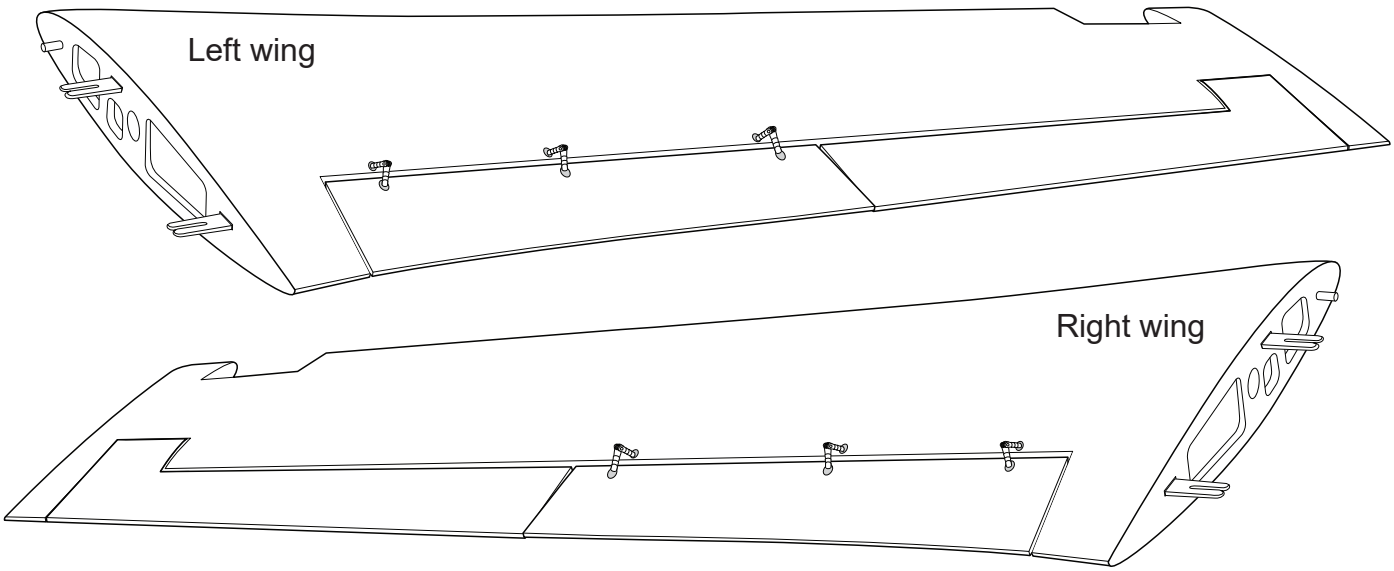

INSTALLING THE AILERON AND FLAP SERVO

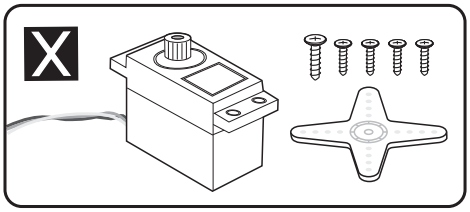

1. Install the rubber grommets and brass eyelets onto the aileron servo.

2. Using a modeling knife, remove the covering from over the pre-cut servo arm exit hole on the aileron servo tray / hatch. This hole will allow the servo arm to pass through when installing the aileron pushrods

3. Place the servo into the servo tray. Center the servo within the tray and drill pilot holes through the block of wood for each of the four mounting screws provided with the servo.

4. Using the thread as a guide and using masking tape, tape the servo lead to the end of the thread: carefully pull the thread out. When you have pulled the servo lead out, remove the masking tape and the servo lead from the thread.

5. Place the aileron servo tray / hatch into the servo box on the bottom of the wing and drill pilot holes through the tray and the servo box for each of the four mounting screws. Secure the servo tray in place using the mounting screws provided .

6. Repeat step # 2 - # 5 to install the second aileron servo in the opposite wing half.

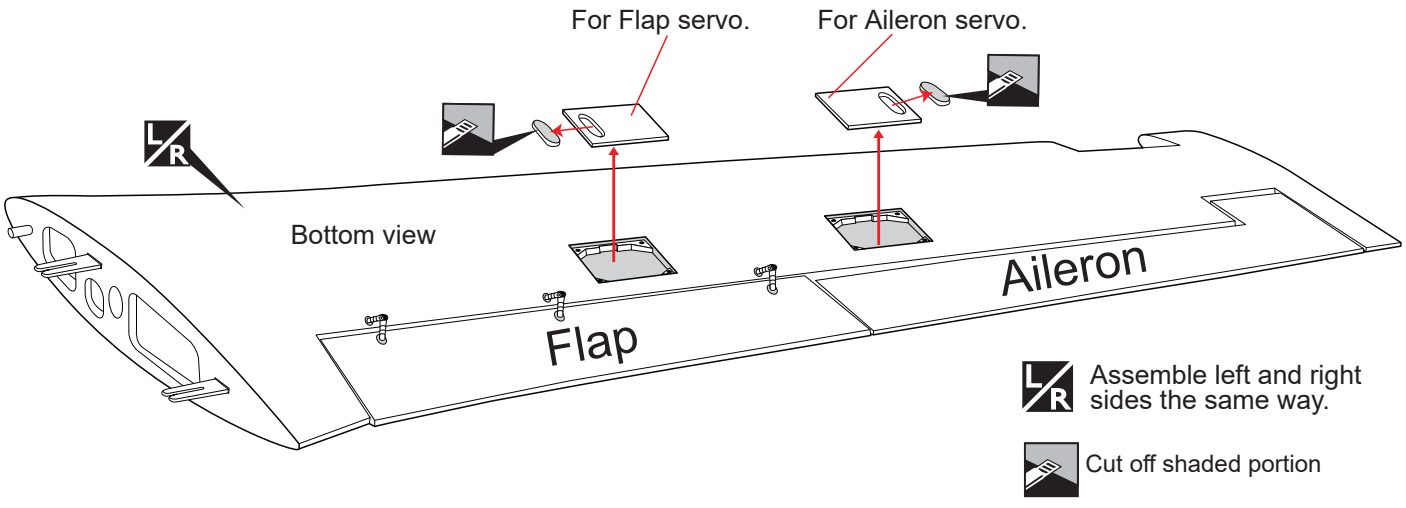

x4

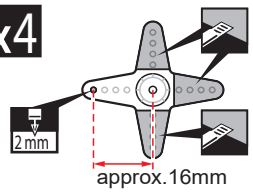

x4 Aileron and flap servos.

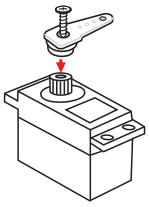

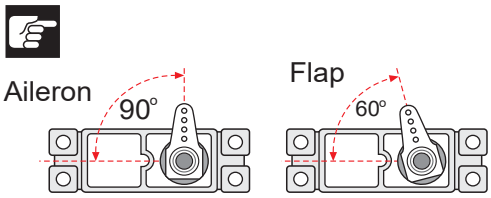

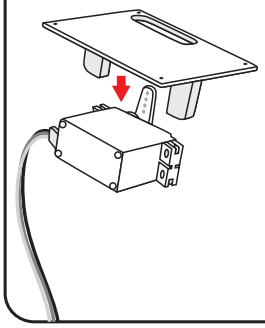

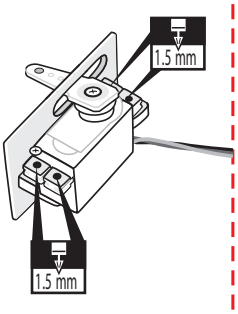

x2 For Flap.
L/R For Aileron.

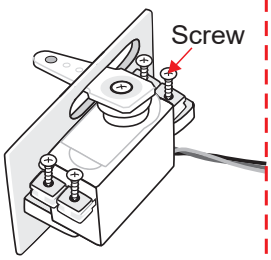

x2 For Flap.
L/R For Aileron.

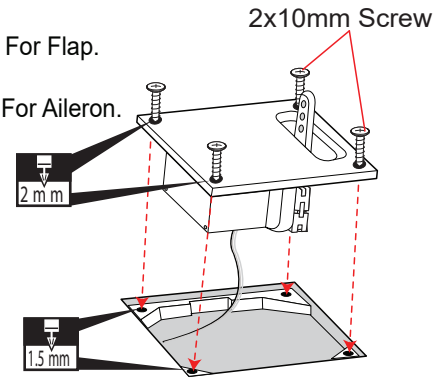

2 x 10mm Tp Screw - - - - 16

Warning!

Set all scerws securely. If they come off during flight you will lose control of your aircraft!

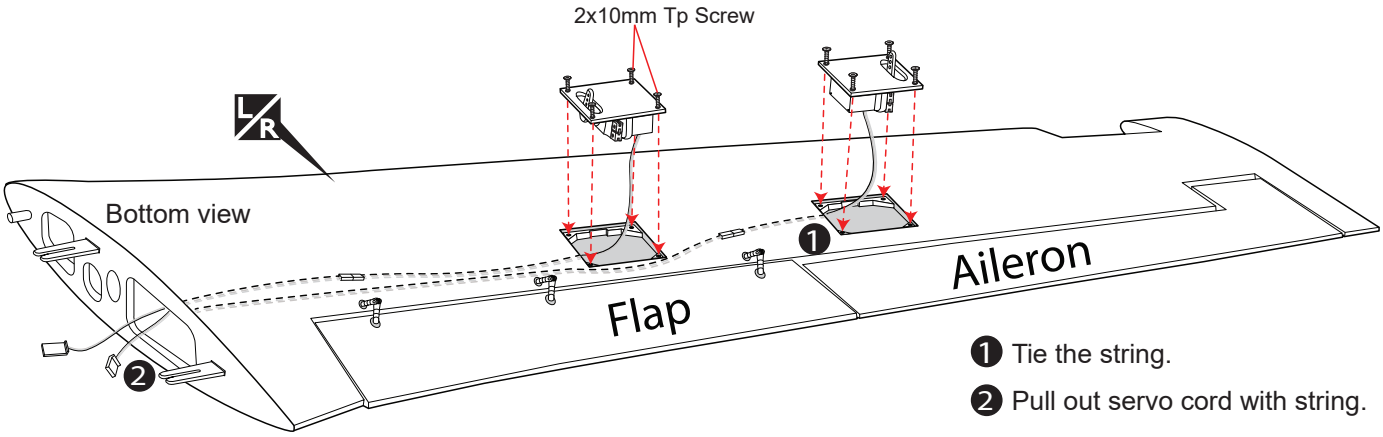

1 Tie the string.

2 Pull out servo cord with string.

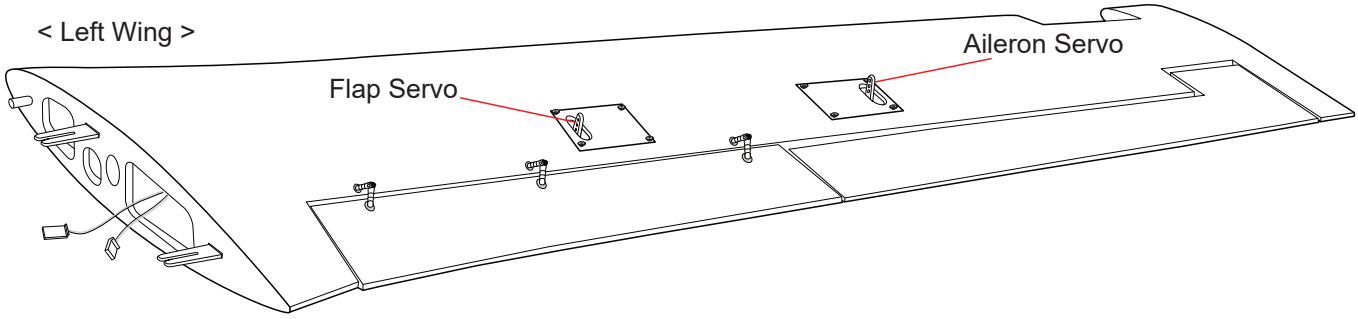

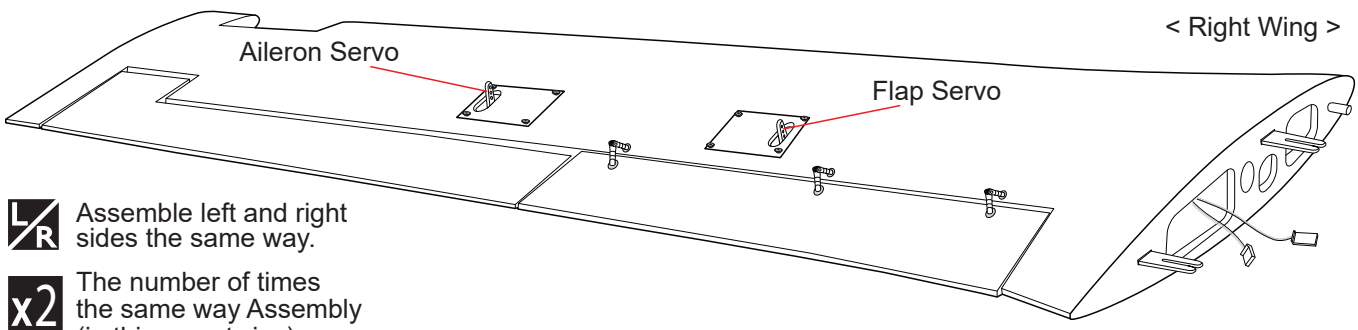

L/R Assemble left and right sides the same way.

x2 The number of times the same way Assembly (in this case twice).

1.5mm Drill holes using the stated. (in this case 1.5mm Ø).

Pay close attention here.

INSTALLING THE AILERON AND FLAP LINKAGES

1. Install the control horn into the aileron and flap.
2. Locate the metal rod wire, screw the plastic link ball onto the threaded end of the wire.
3. Plug the aileron and flap servo into the receiver and center the servo. Install the servo arm onto the servo. The servo arm should be perpendicular to the servo and point toward the middle of the wing.
4. Center the aileron and hold it in place using a couple of pieces of masking tape. Adjust the linkage until the aileron and the servo arm are both centered and then tighten the nut against. Remember use thread locking compound to secure.
5. Repeat step 1 - step 4 for the second aileron and flap linkage.

Aluminum ball - - - - - - - 8

- - - - - - - 8

3x45 mm Push rod - - 4

3 x 12mm Cap Screw - - - - - - - 8

3mm Flat Washer - - - - - - - 8

Horn - - - - - - - 4

3mm Hex Nut - - - - - - - 8

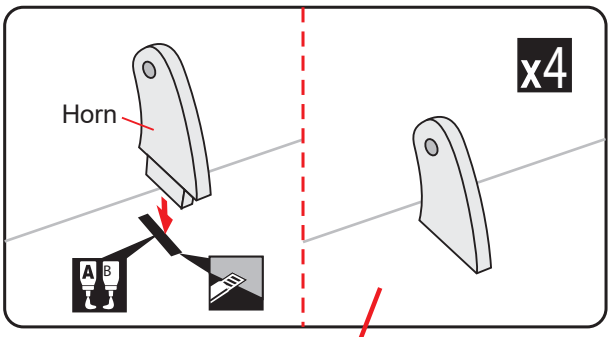

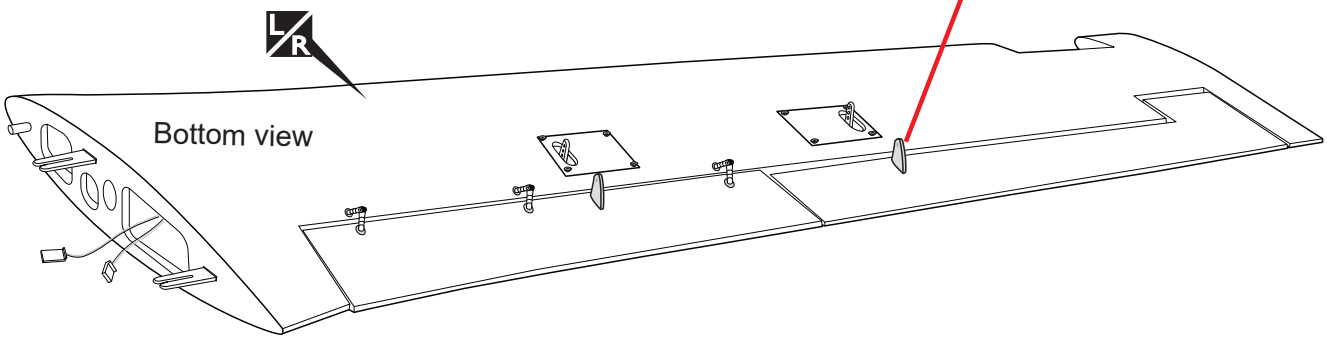

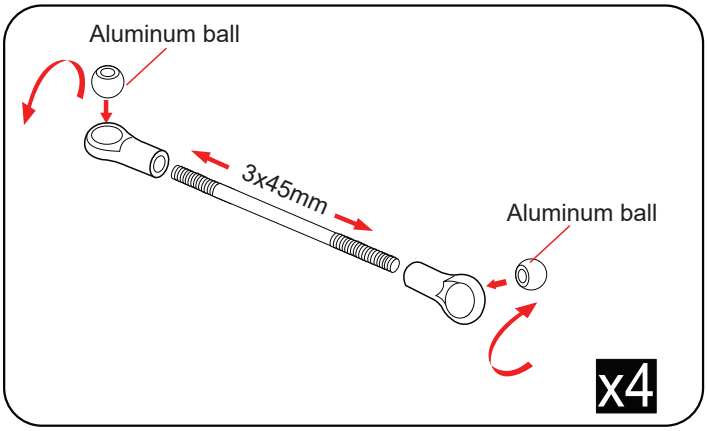

Cut off shaded portion

L/R Assemble left and right sides the same way

x2 The number of times the same way Assembly (in this case twice).

Apply epoxy glue.

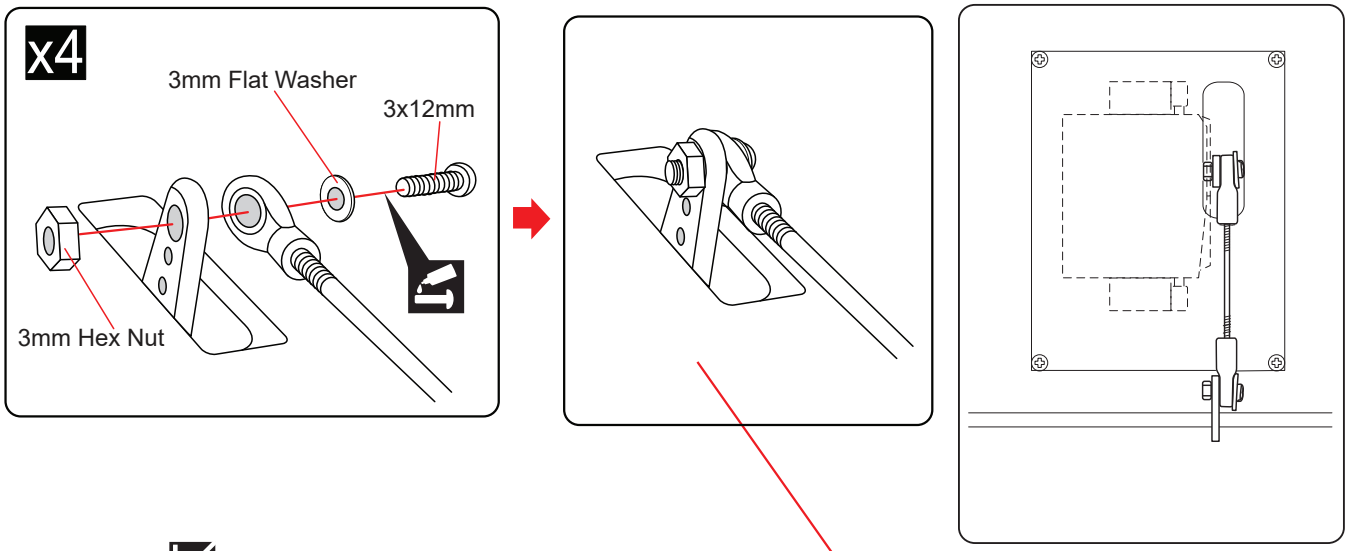

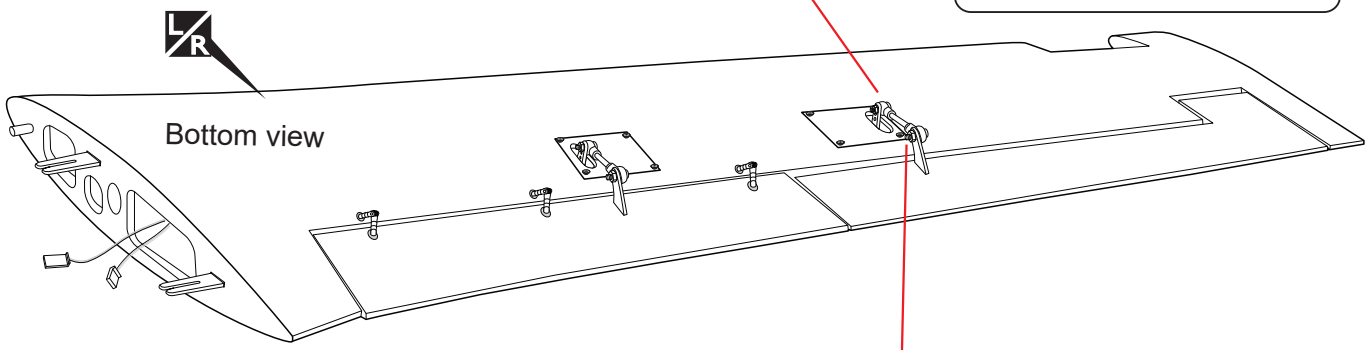

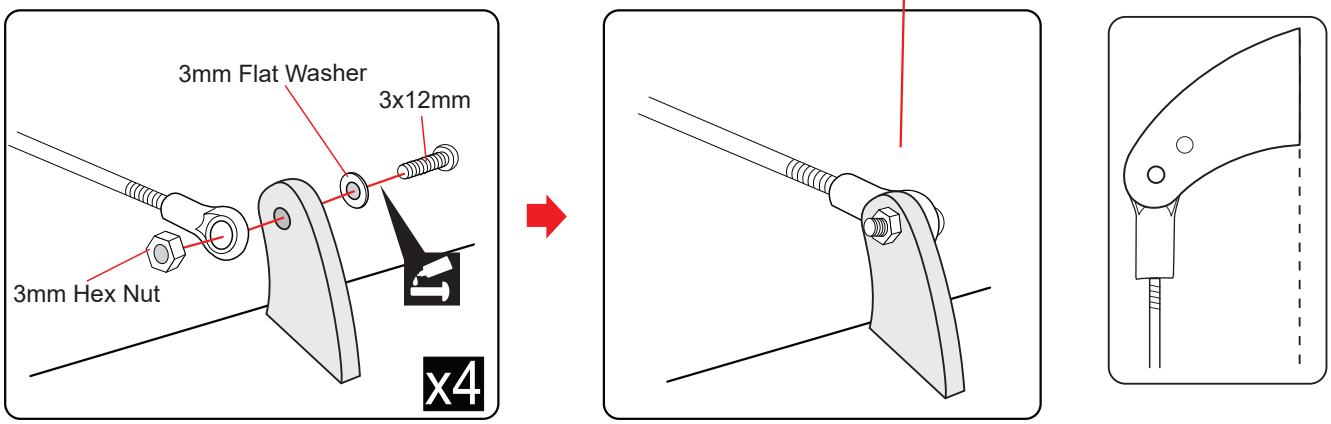

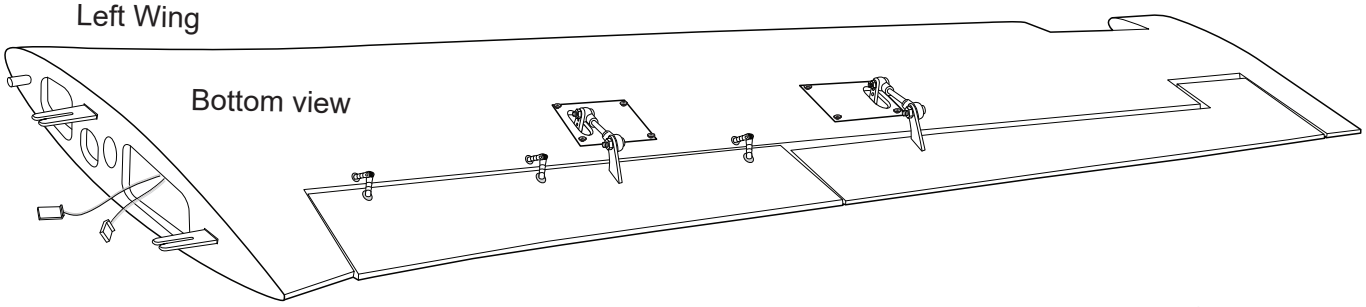

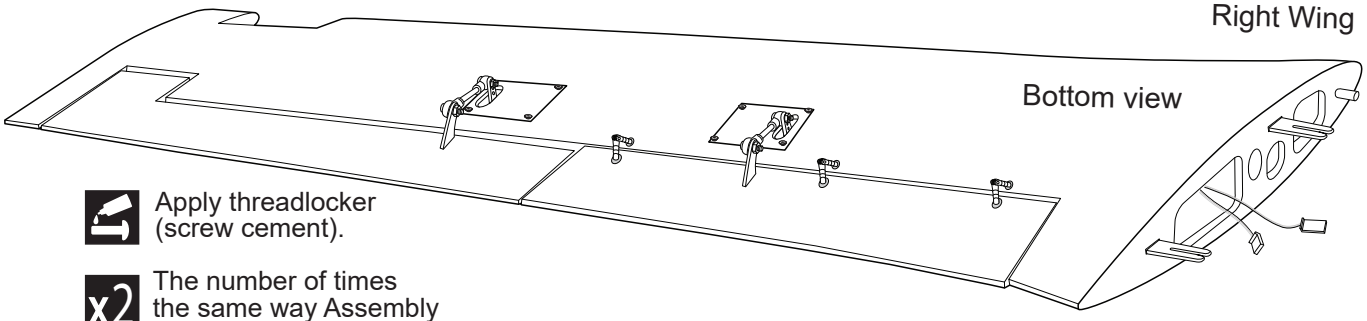

Apply threadlocker (screw cement).

x2 The number of times the same way Assembly (in this case twice).

L/R Assemble left and right sides the same way.

INSTALLING MAIN GEAR

3x15mm Cap screw --- 8
3x4mm Setscrew ---------- 2
5mm Flat washer -------- 2
---------- 4
3mm Flat washer -------- 8
---------- 2
3x10mm Button screw -------- 4
Door gear
3x8mm Button screw -------- 4
--- 2
-------- 2
Wheel well
--- 2
5x30mm Socket Head Cap Screw
------- 2

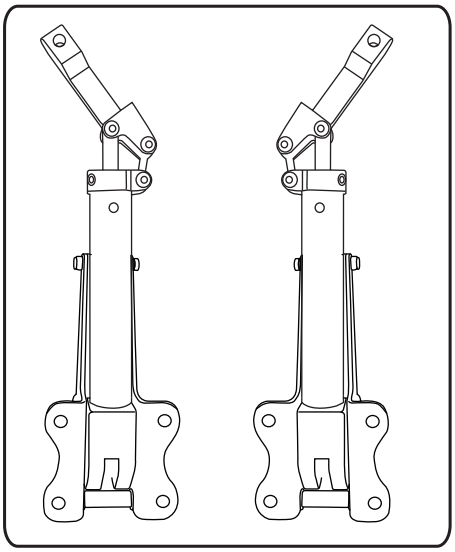

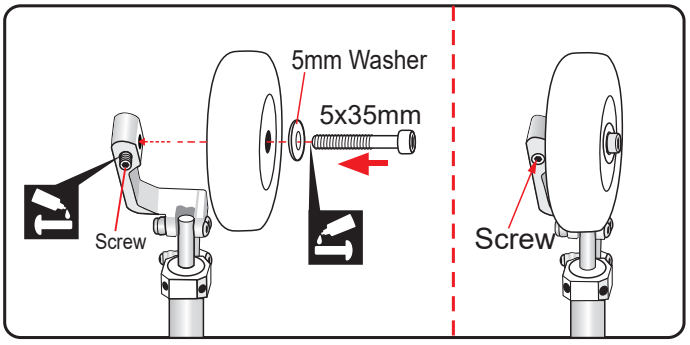

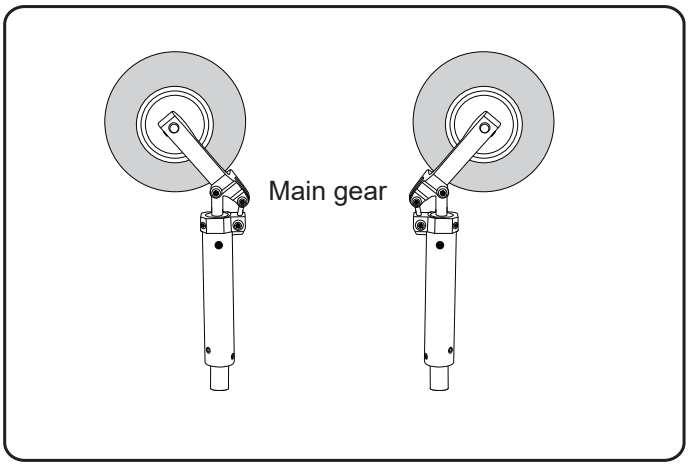

ELECTRIC GEAR RETRACTS

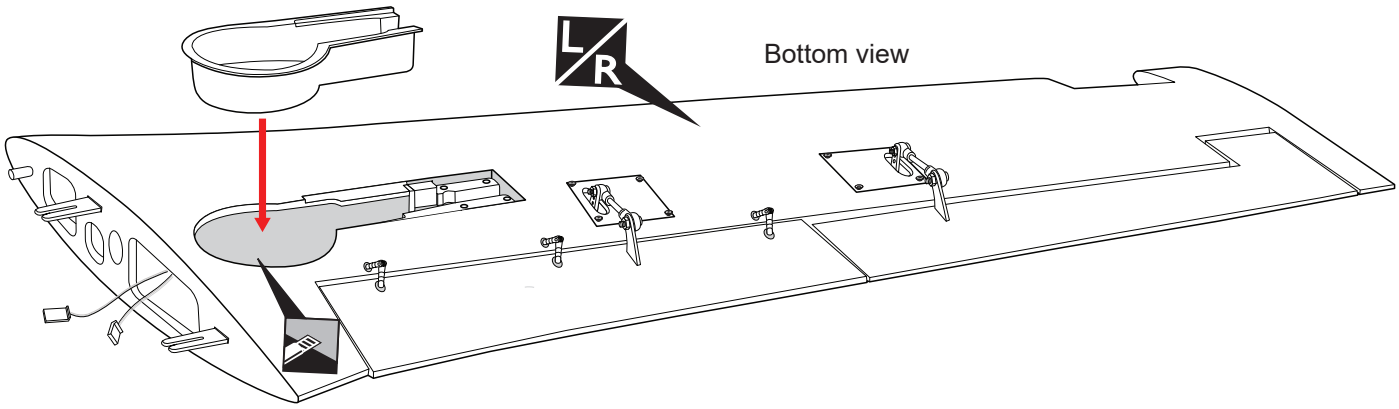

L/R Assemble left and right sides the same way.

Apply threadlocker (screw cement).

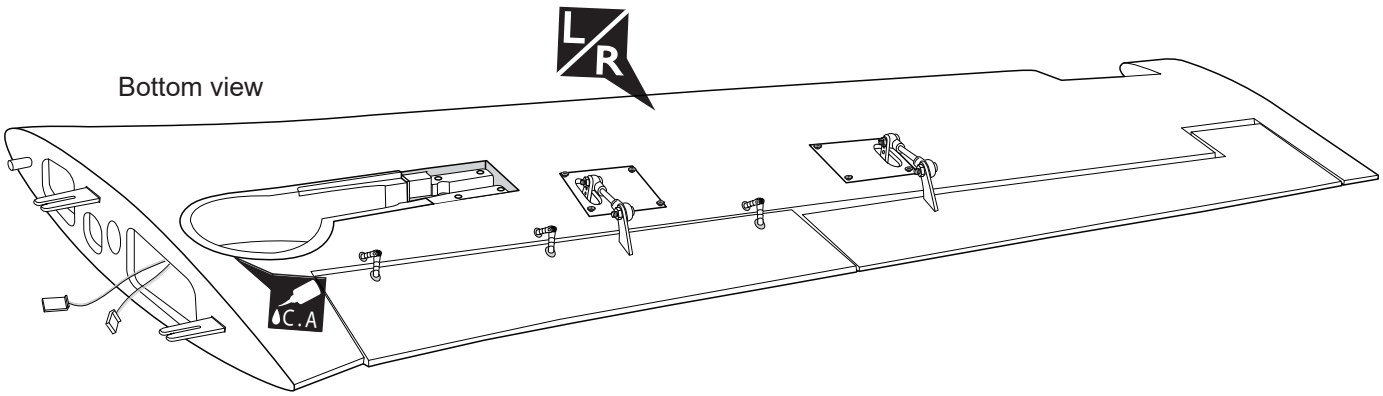

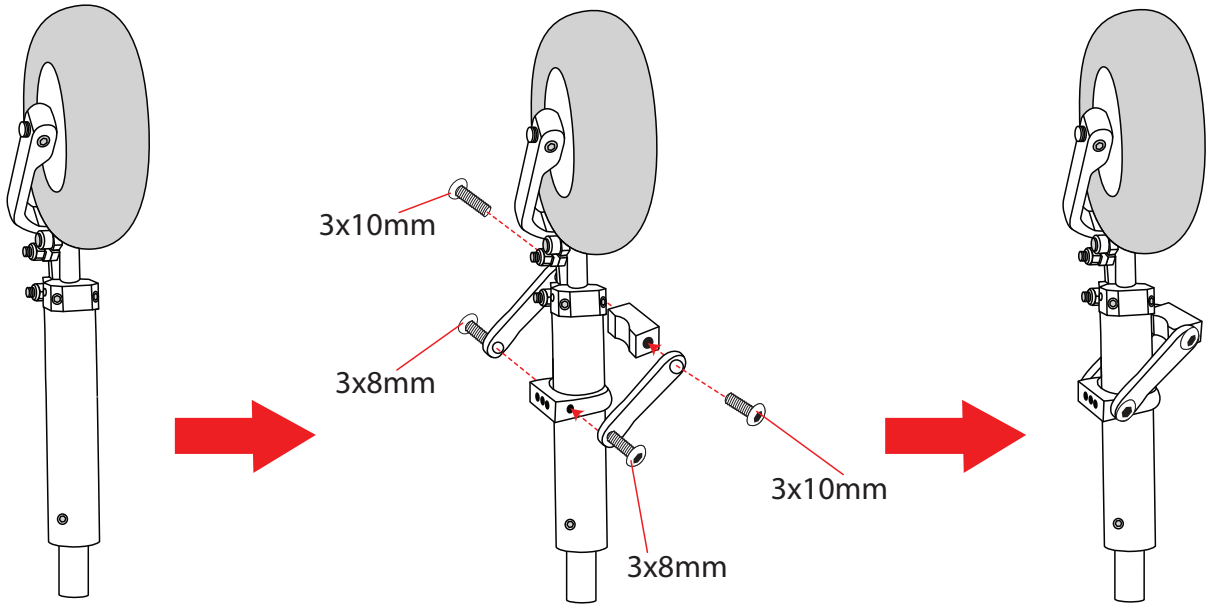

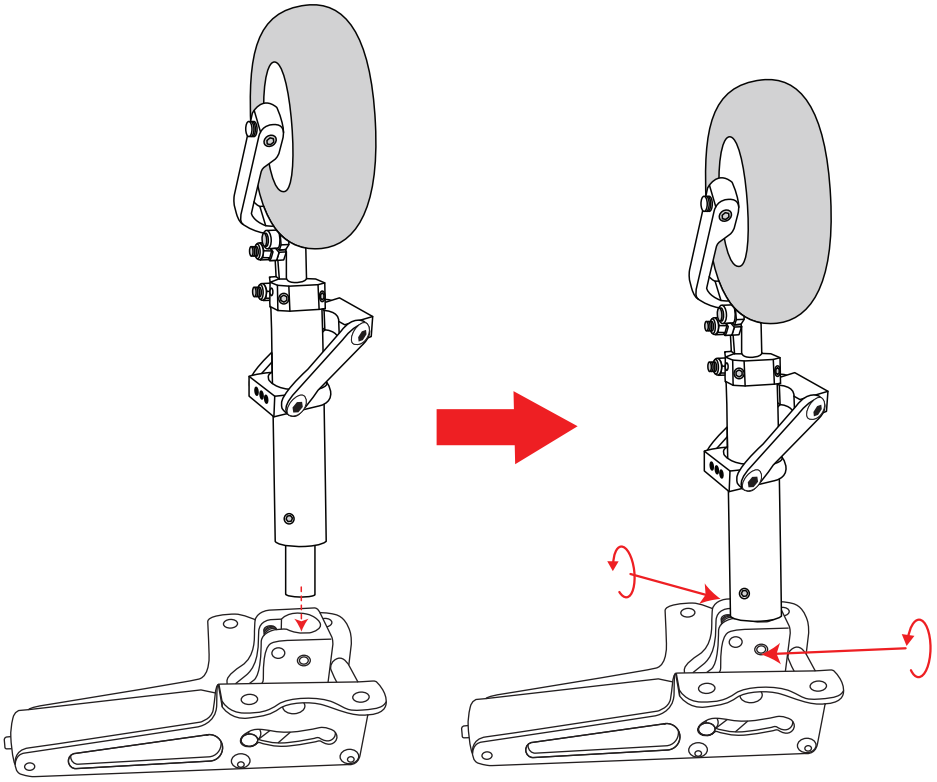

L/R Assemble left and right sides the same way.

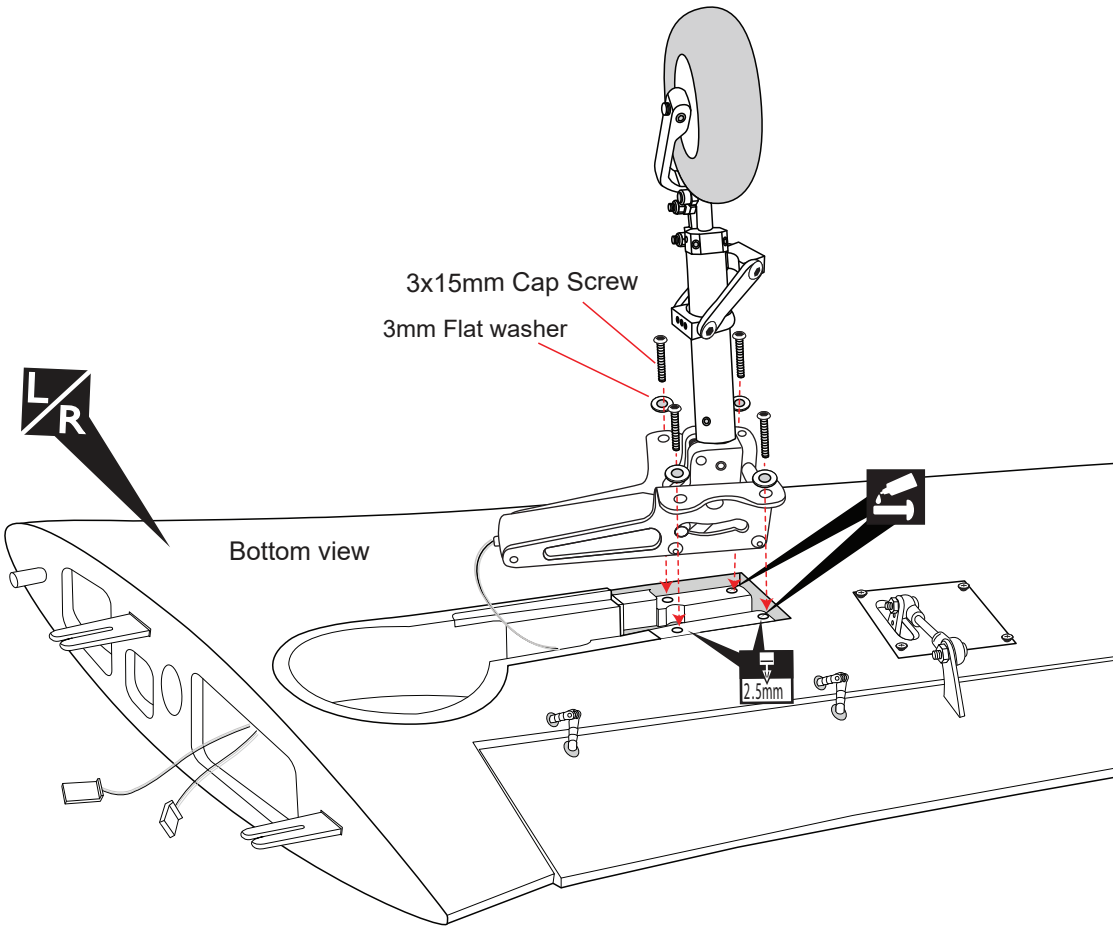

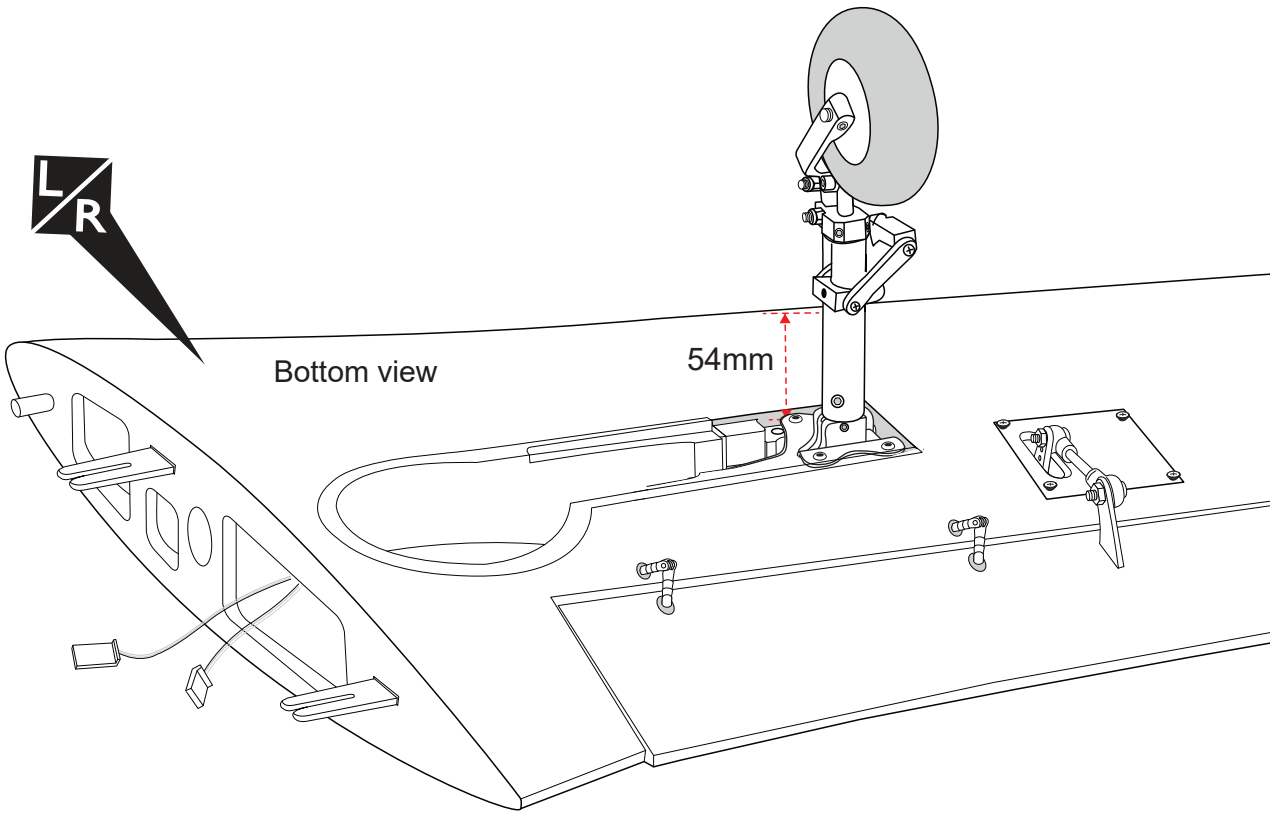

Apply threadlocker (screw cement).

Assemble left and right sides the same way.

Drill holes using the stated. (in this case 1.5mm Ø).

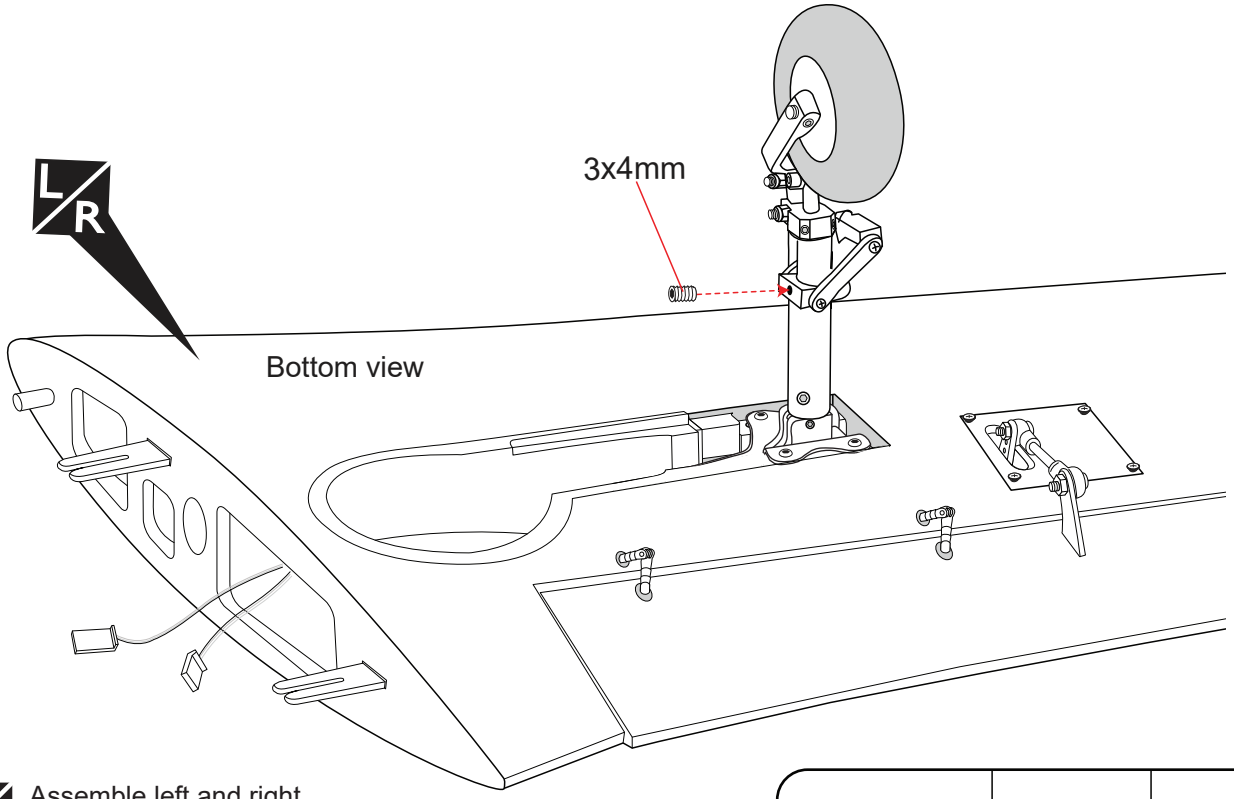

Assemble left and right sides the same way.

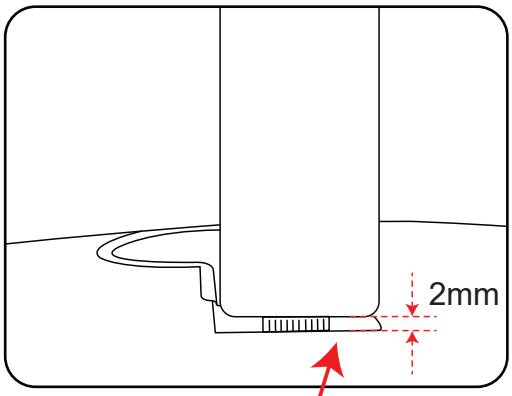

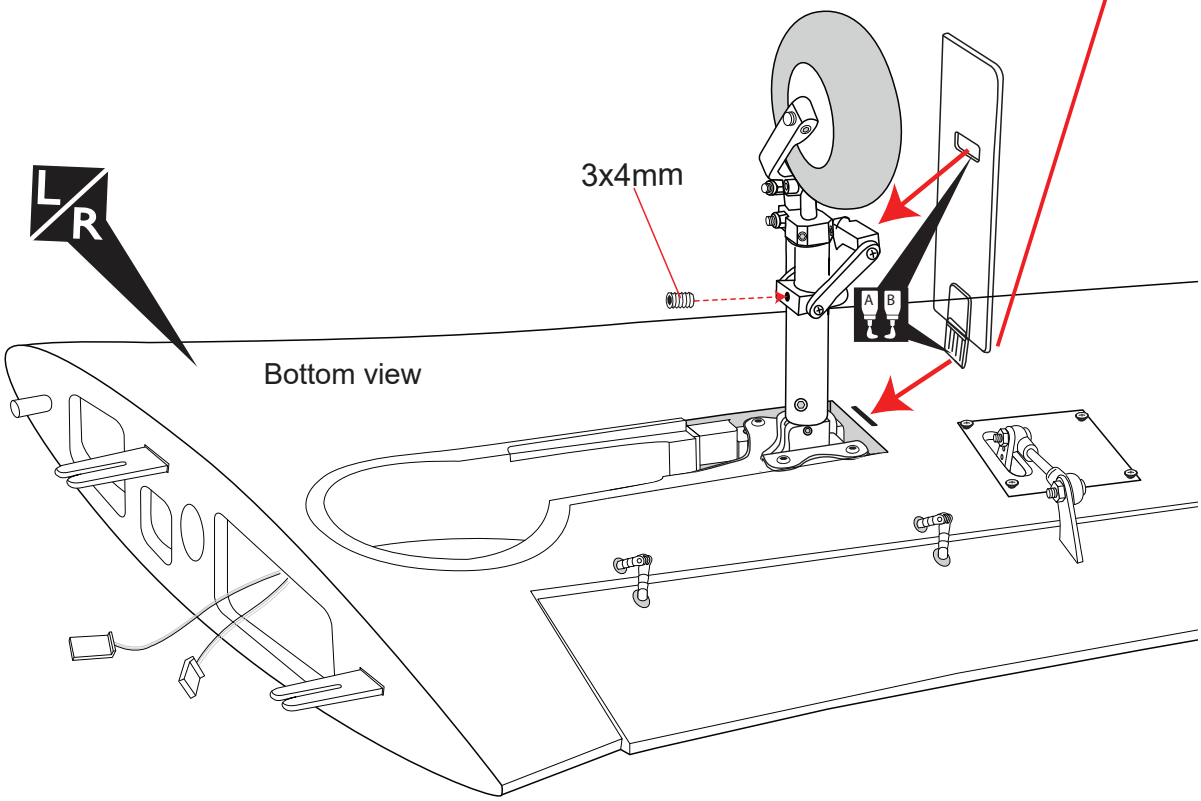

Apply epoxy glue.

Assemble left and right sides the same way.

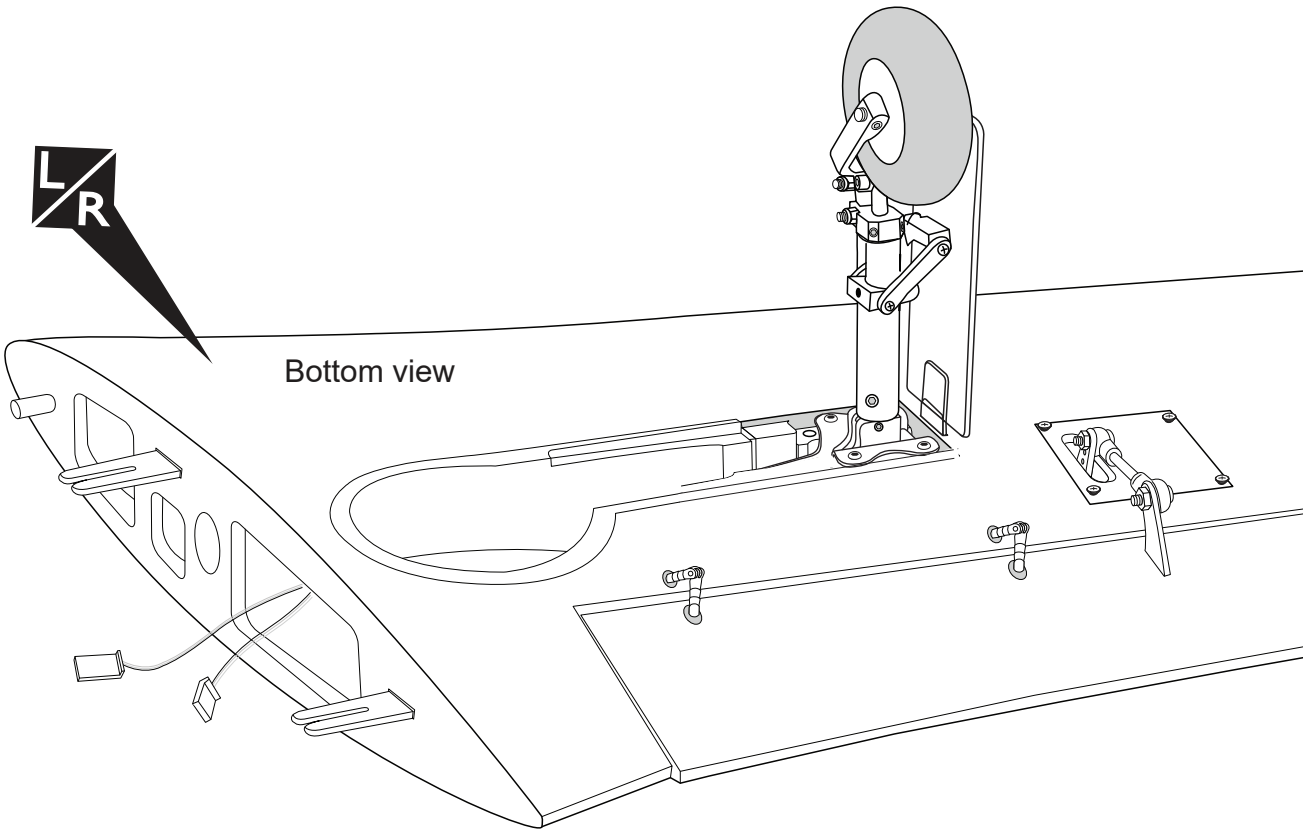

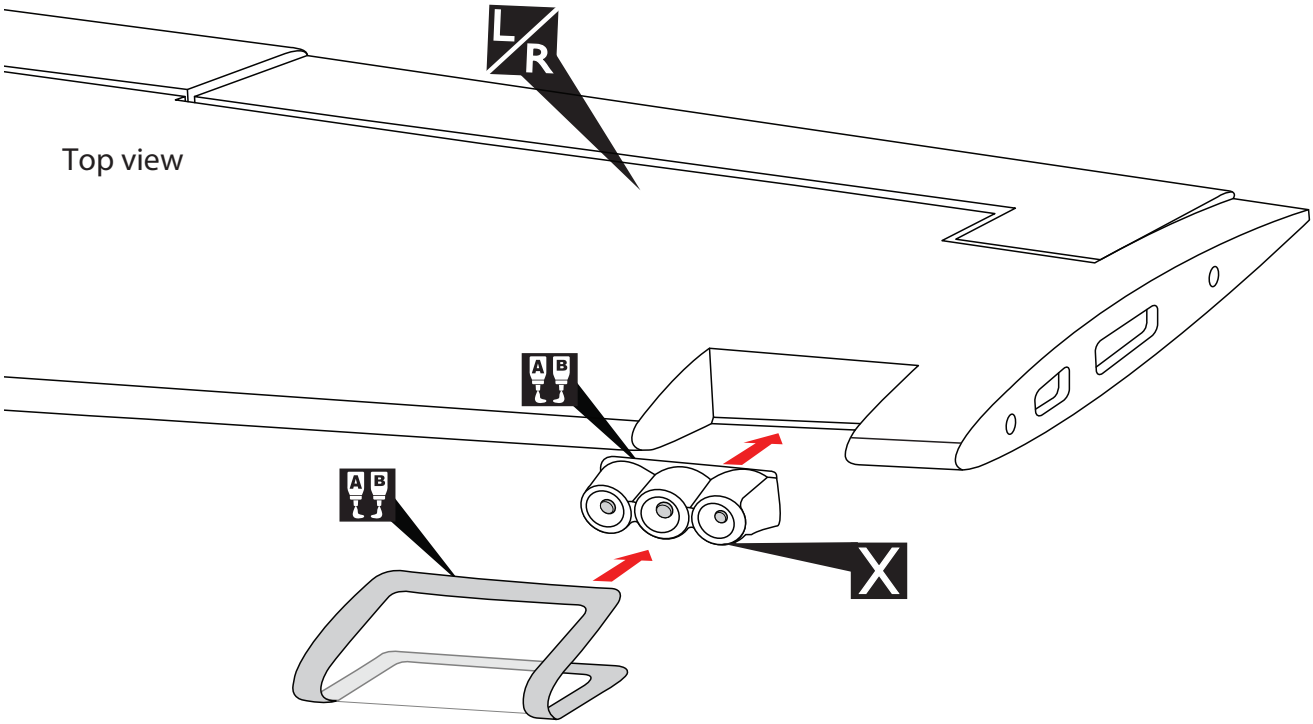

Apply epoxy glue.

Must be purchased separately!

Assemble left and right sides the same way.

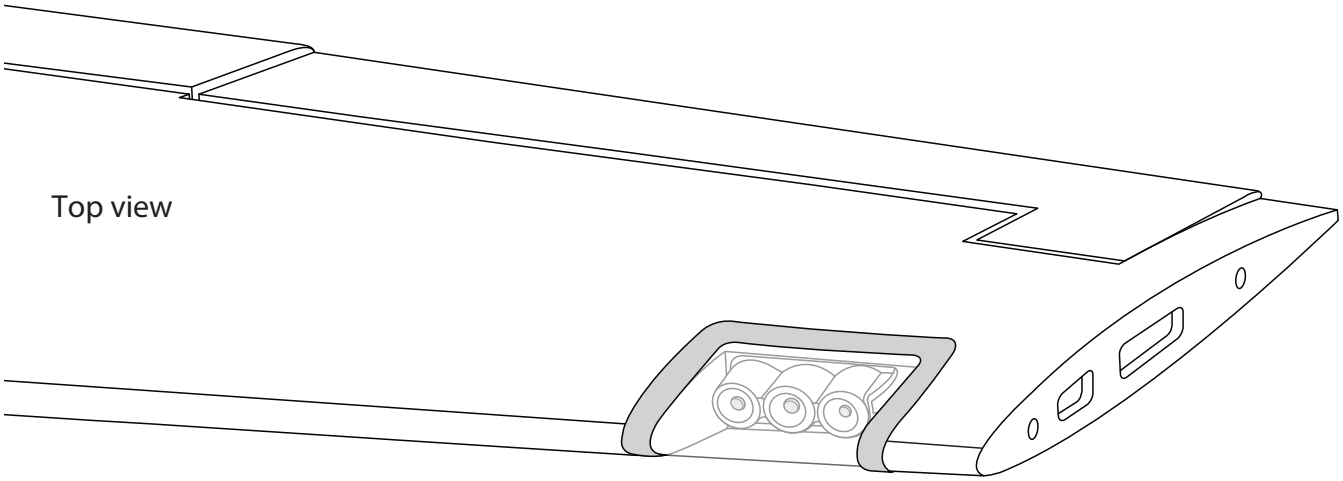

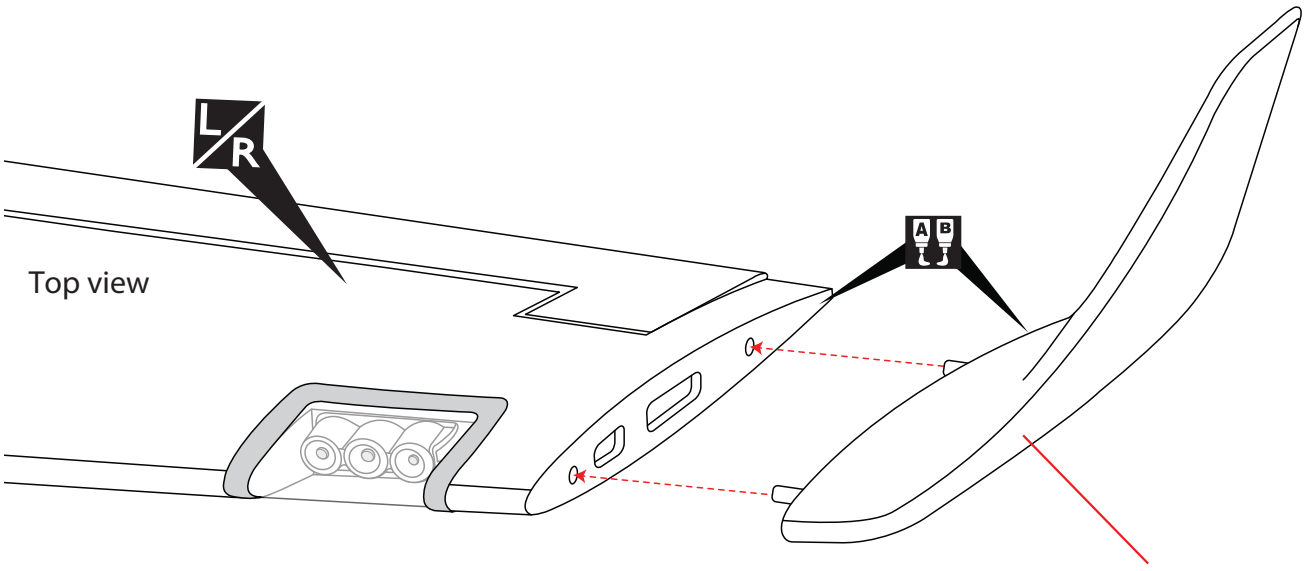

Apply epoxy glue.

Assemble left and right sides the same way.

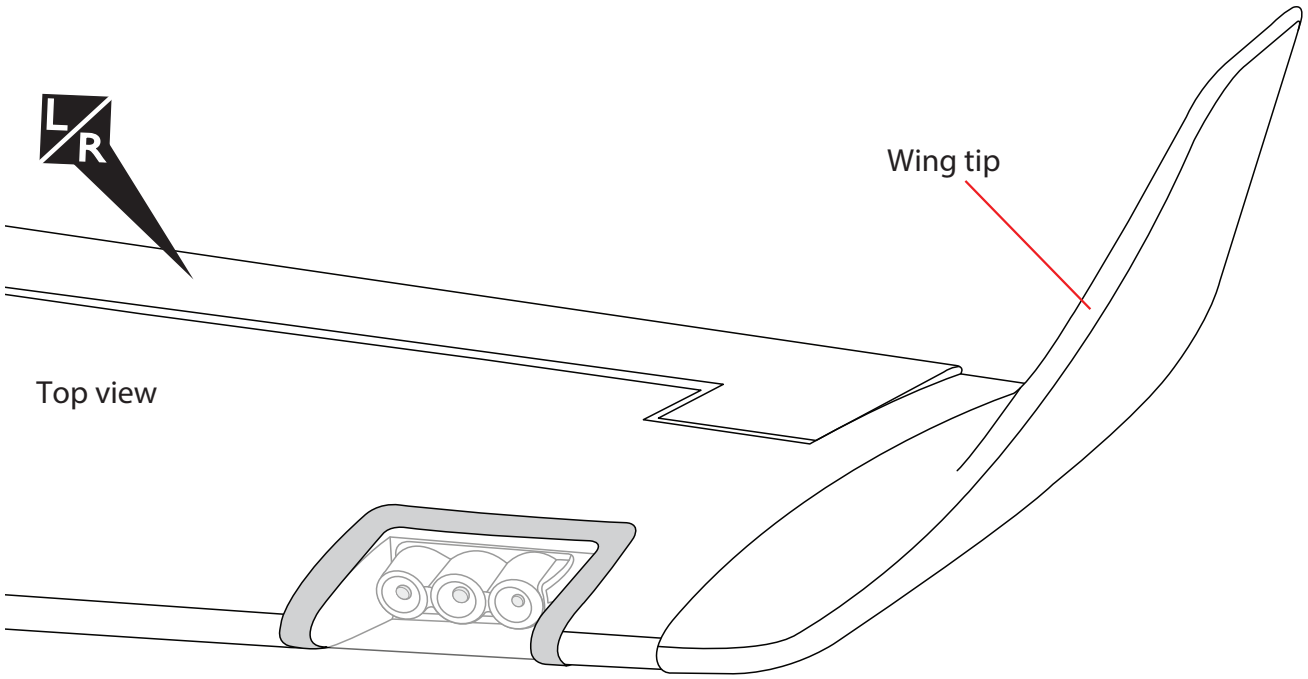

INSTALLING HORIZONTAL STABILIZER

Pinned hinge

 - - - - - - - - - - - - - 8

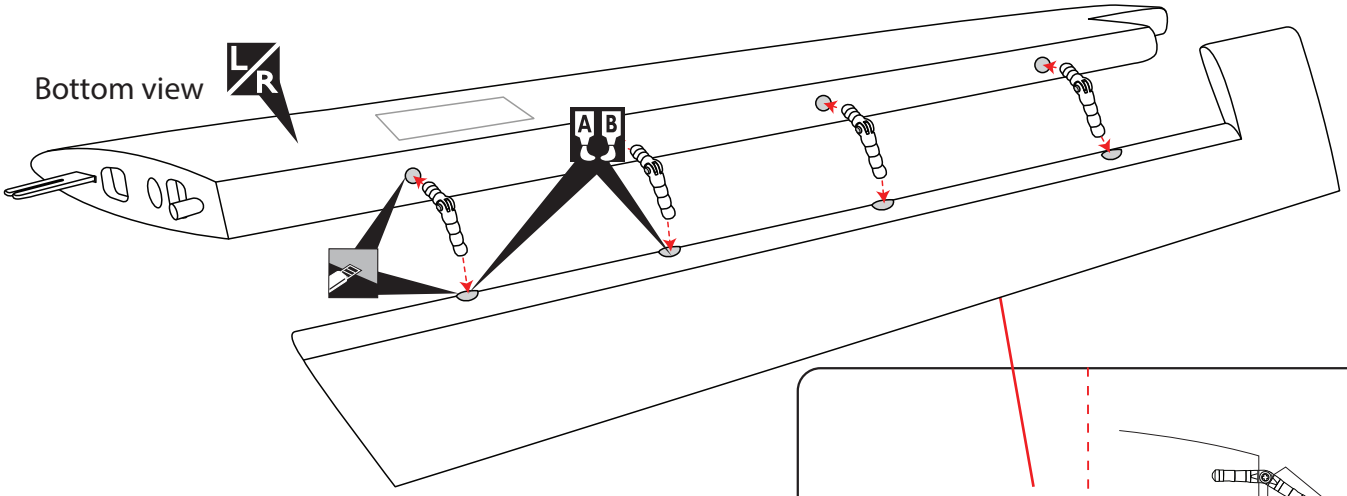

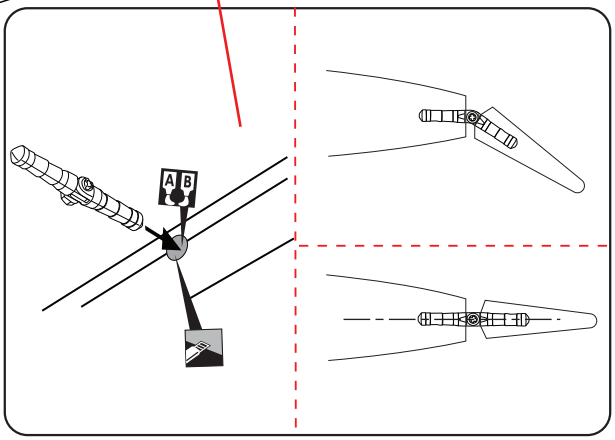

A B Apply epoxy glue.

L/R Assemble left and right sides the same way.

Cut off shaded portion carefully.

Bottom view

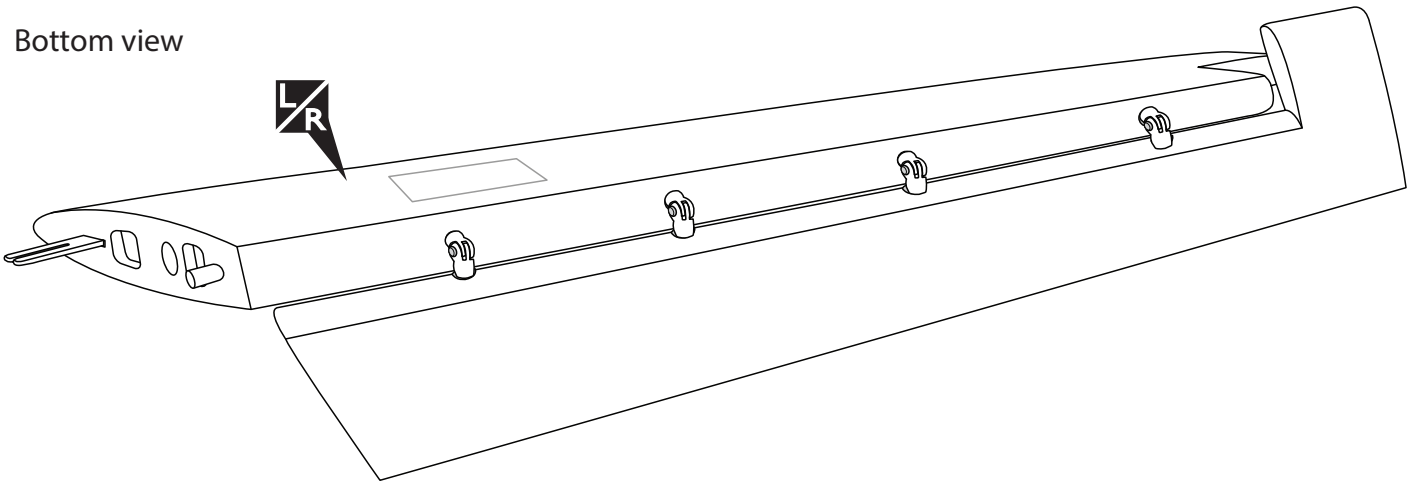

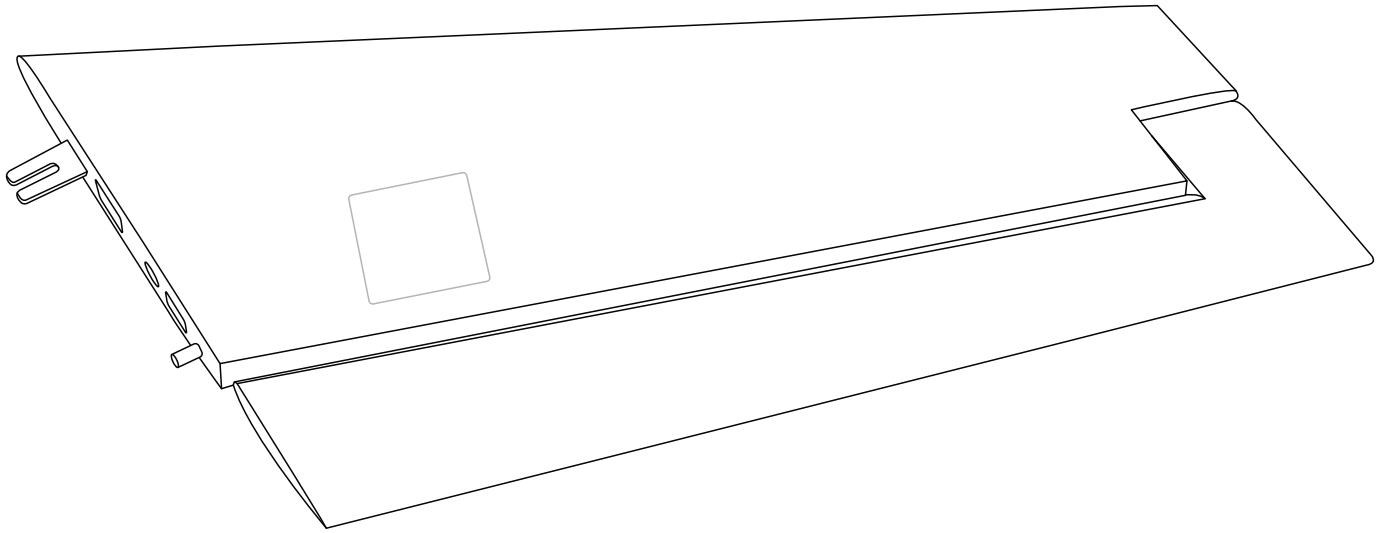

L/R Assemble left and right sides the same way.

INSTALLING THE HORIZONTAL STABILIZER SERVO

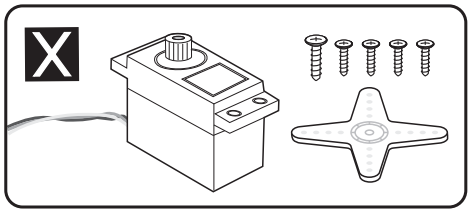

1. Install the rubber grommets and brass eyelets onto the aileron servo.

2. Using a modeling knife, remove the covering from over the pre-cut servo arm exit hole on the horizontal stabilizer servo tray / hatch. This hole will allow the servo arm to pass through when installing the aileron pushrods.

3. Place the servo into the servo tray. Center the servo within the tray and drill pilot holes through the block of wood for each of the four mounting screws provided with the servo.

4. Using the thread as a guide and using masking tape, tape the servo lead to the end of the thread: carefully pull the thread out. When you have pulled the servo lead out, remove the masking tape and the servo lead from the thread.

5. Place the horizontal stabilizer servo tray / hatch into the servo box on the bottom of the wing and drill pilot holes through the tray and the servo box for each of the four mounting screws. Secure the servo tray in place using the mounting screws provided.

X Must be purchased separately!

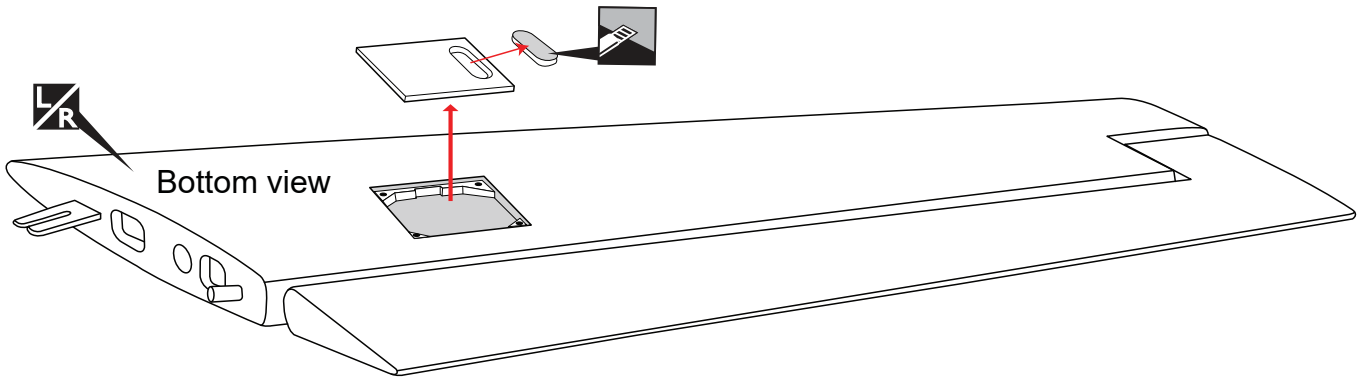

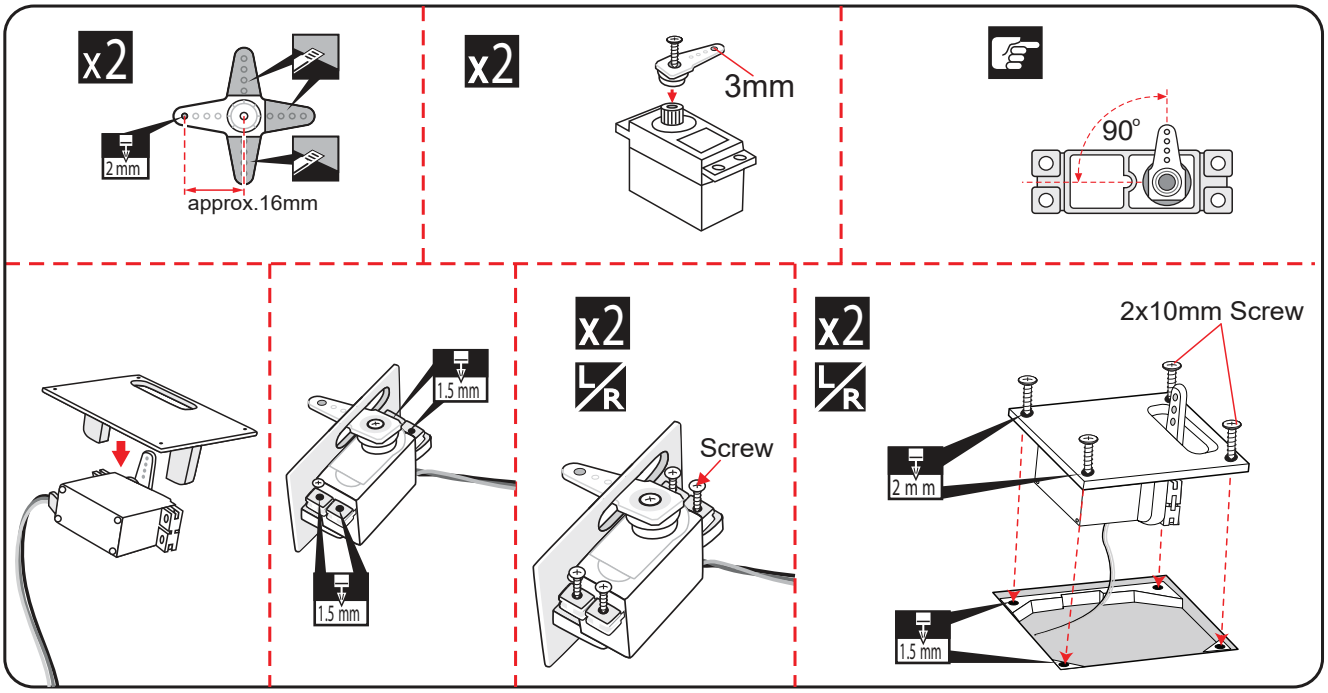

2 x 10mm Tp Screw - - - - 8

Warning!

Set all scerws securely. If they come off during flight you will lose control of your aircraft!

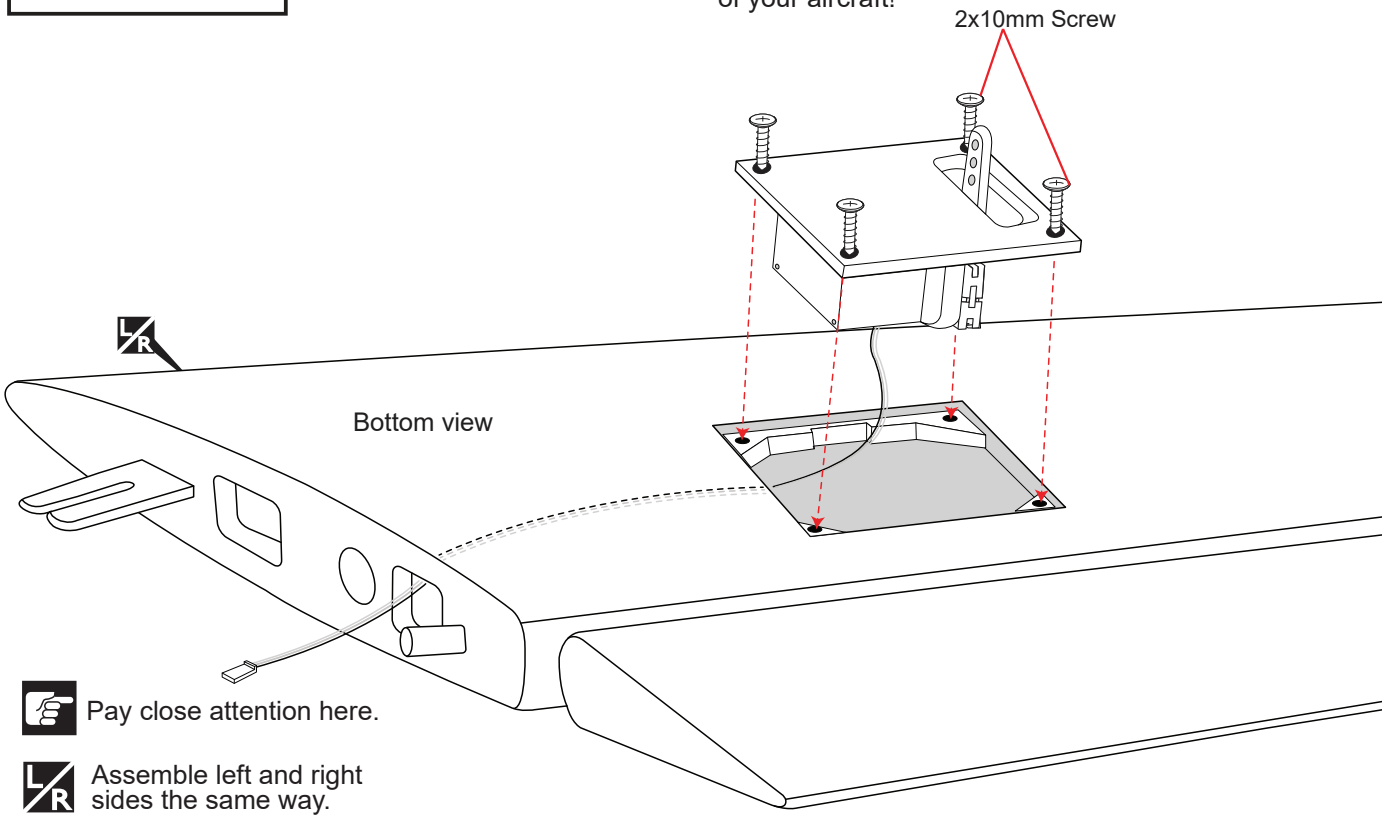

Pay close attention here.

Assemble left and right sides the same way.

Cut off shaded portion carefully.

x2 The number of times the same way Assembly (in this case twice).

1.5mm Drill holes using the stated. (in this case 1.5mm Ø).

2 x 10mm Tp Screw - - - - 8

Warning!

Set all scerws securely. If they come off during flight you will lose control of your aircraft!

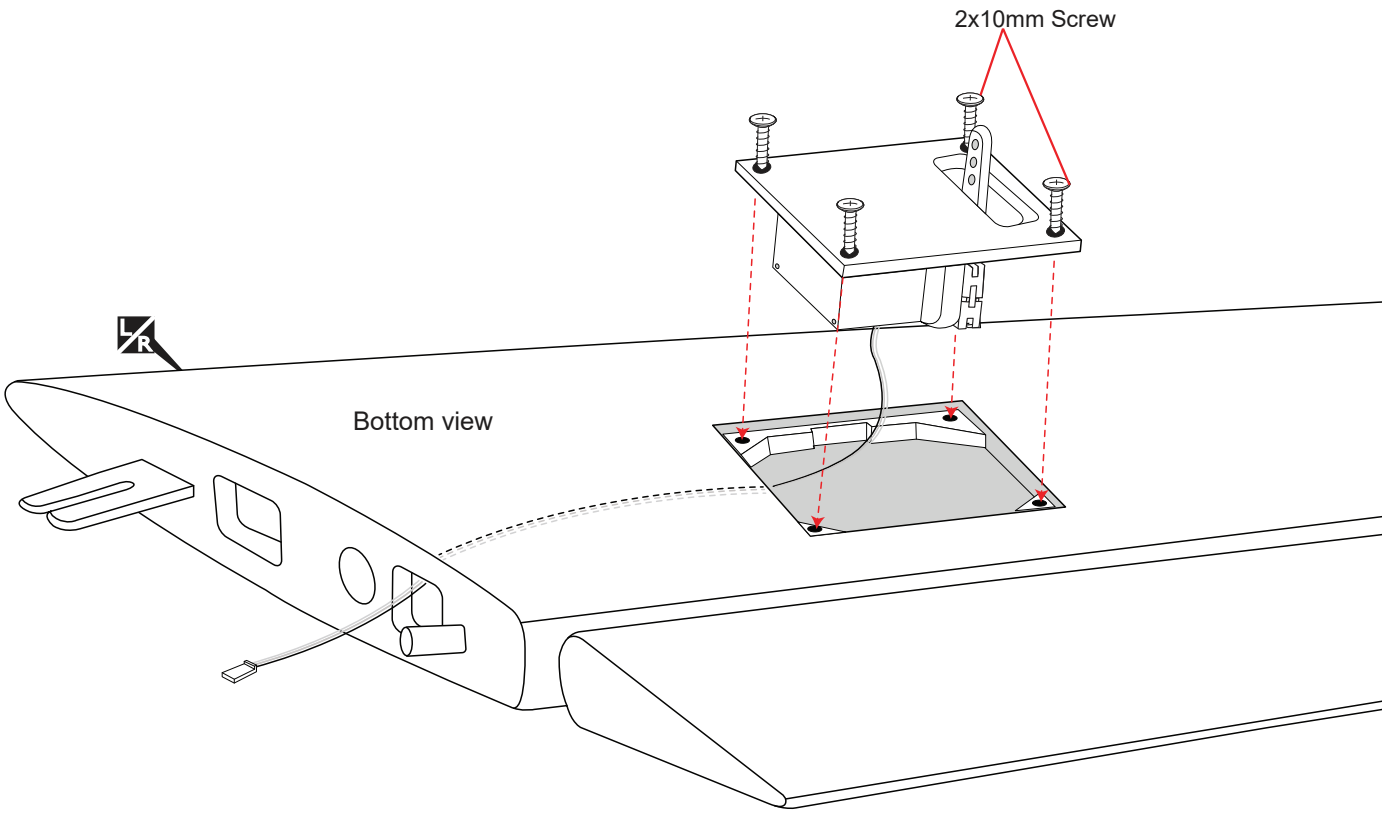

< Bottom view > Left

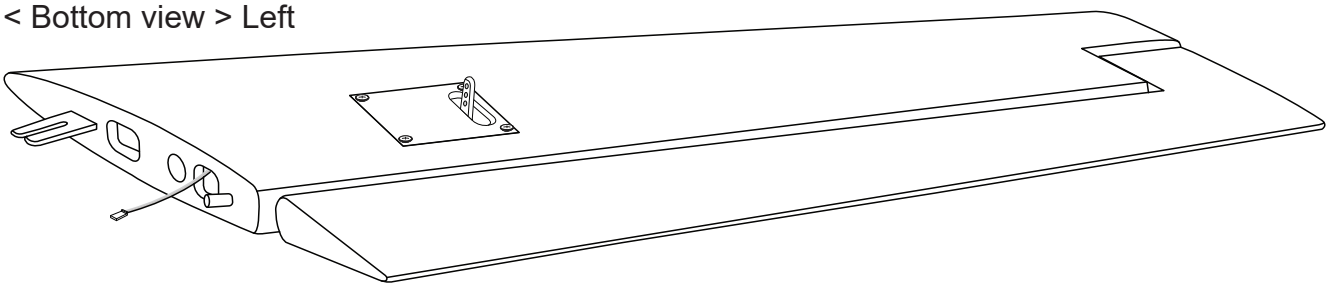

< Bottom view > Right

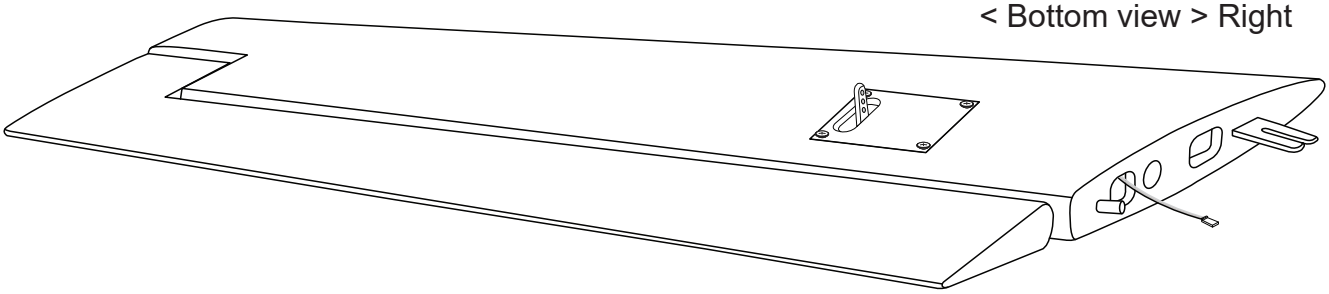

L/R Assemble left and right sides the same way.

INSTALLING THE HORIZONTAL STABILIZER LINKAGES

1. Install the control horn into the horizontal stabilizer.
2. Locate the metal rod wire, screw the plastic link ball onto the threaded end of the wire.
3. Plug the horizontal stabilizer servo into the receiver and center the servo. Install the servo arm onto the servo. The servo arm should be perpendicular to the servo and point toward the middle of the horizontal stabilizer.
4. Center the horizontal stabilizer and hold it in place using a couple of pieces of masking tape. Adjust the linkage until the horizontal stabilizer and the servo arm are both centered and then tighten the nut against. Remember use thread locking compound to secure.
5. Repeat step 1 - step 4 for the second horizontal stabilizer linkage.

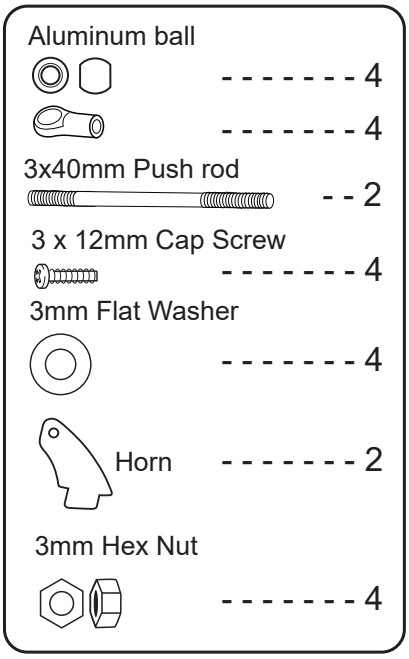

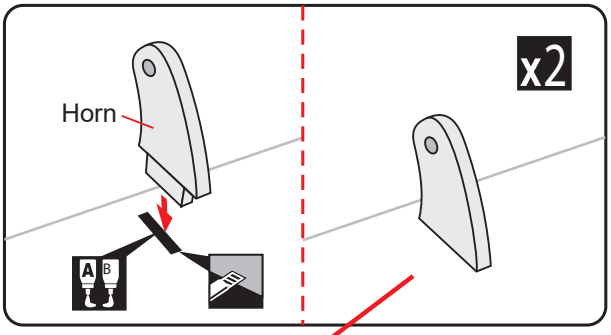

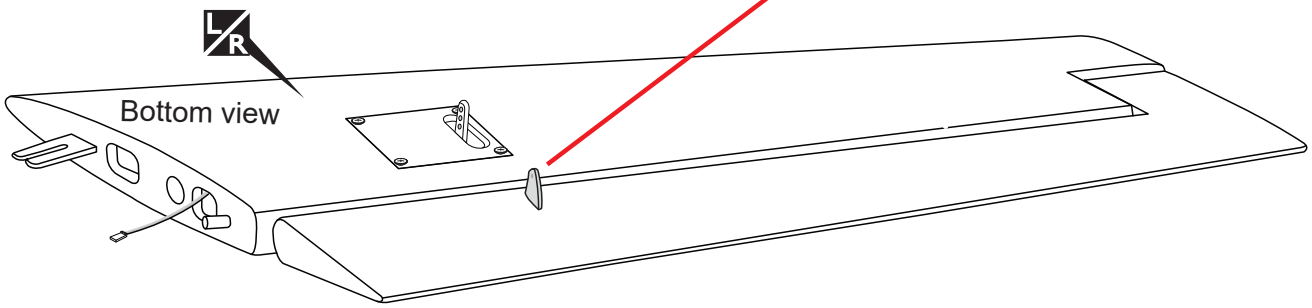

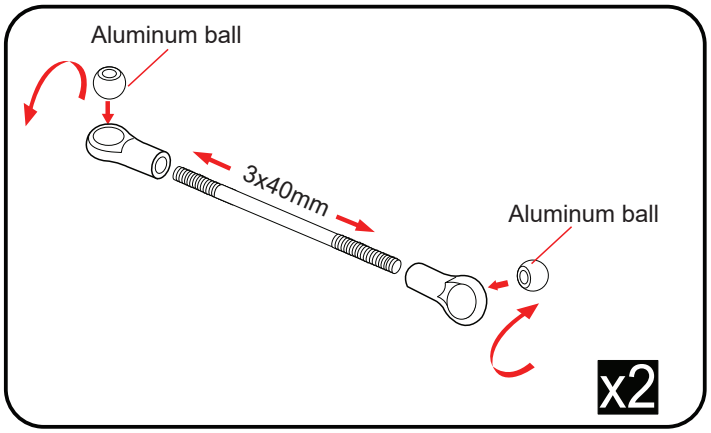

Cut off shaded portion

Assemble left and right sides the same way

Apply epoxy glue.

x2 The number of times the same way Assembly (in this case twice).

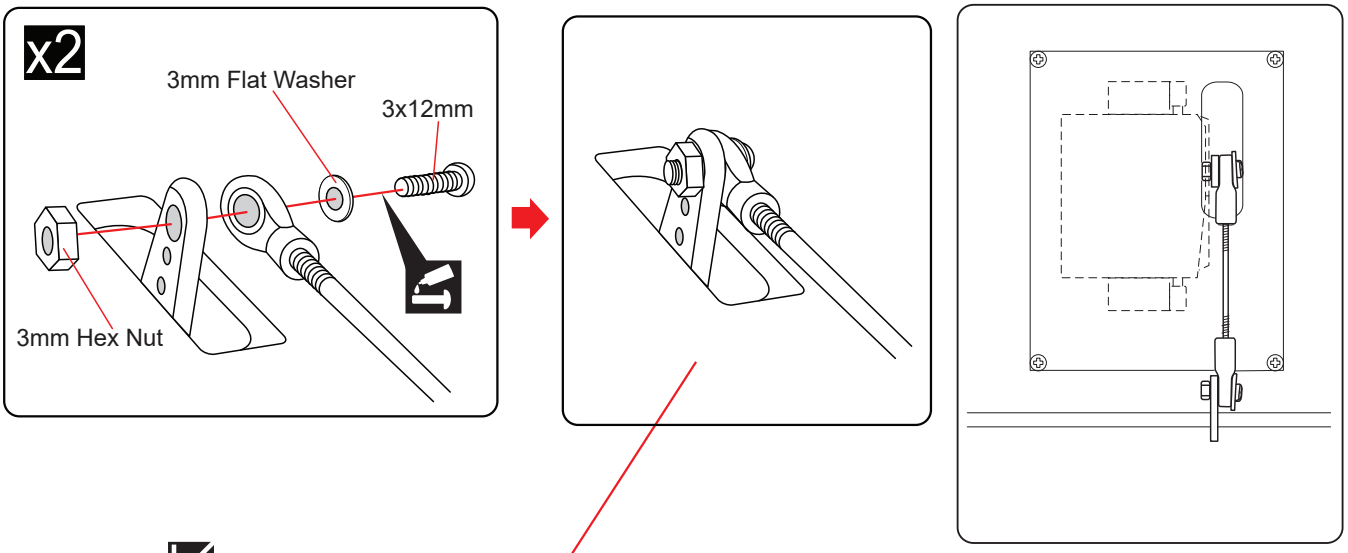

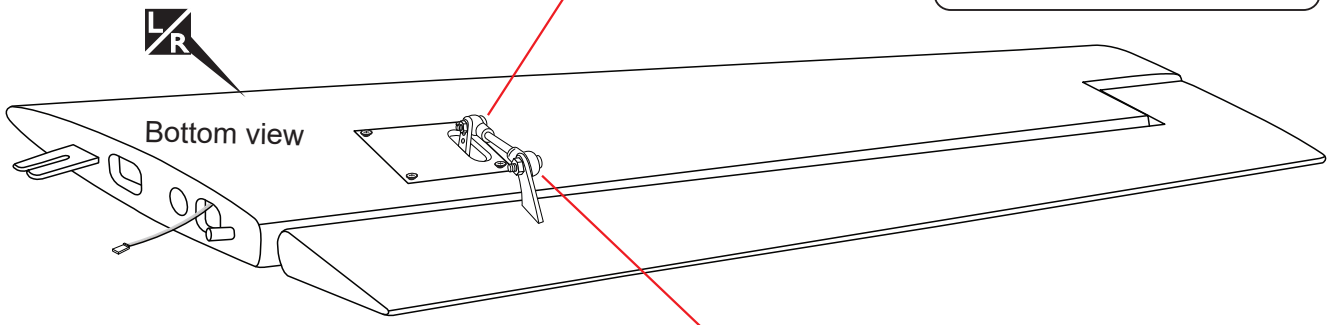

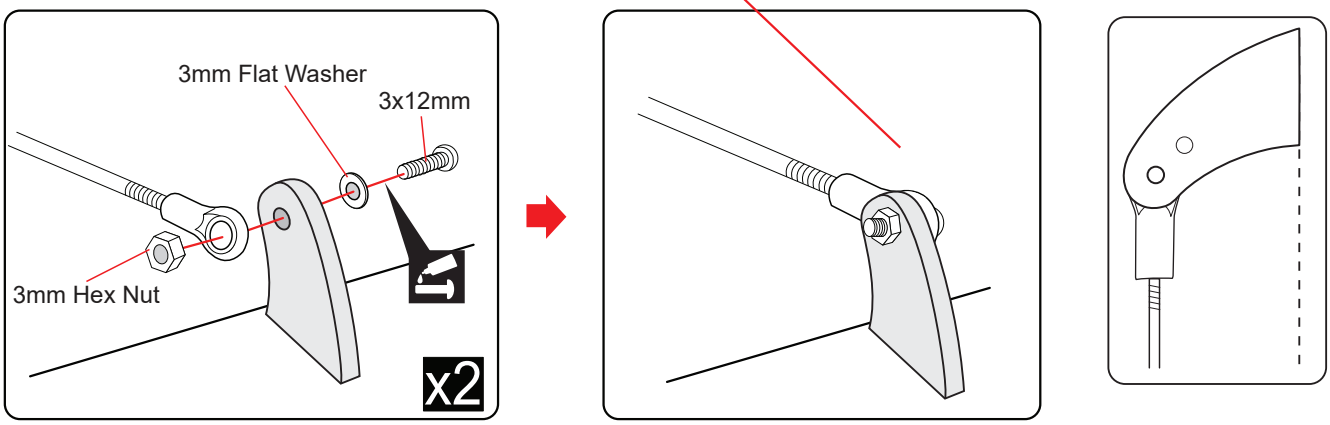

< Bottom view > Left

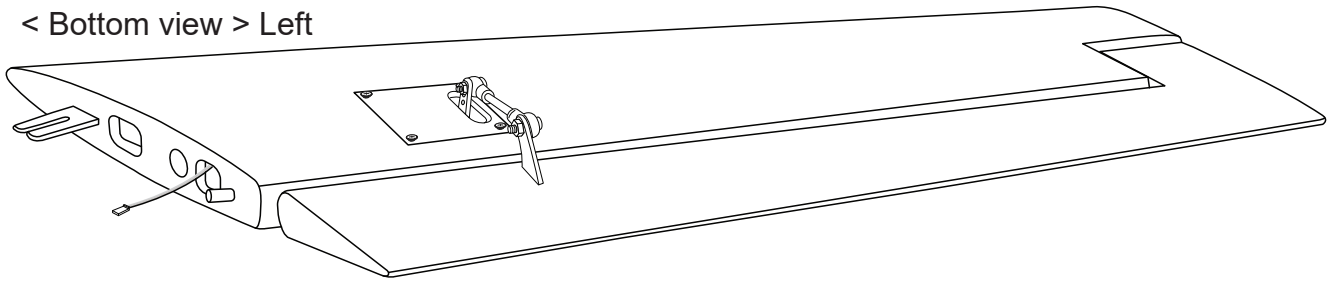

< Bottom view > Right

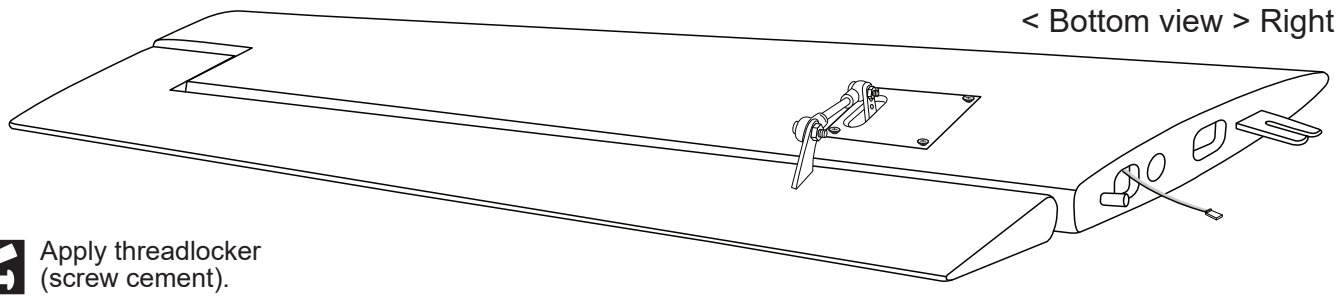

Apply threadlocker (screw cement).

L/R Assemble left and right sides the same way.

x2 The number of times the same way Assembly (in this case twice).

Aluminium tube. ⌀12mm

312mm

Plastic ---------- 2

Top view

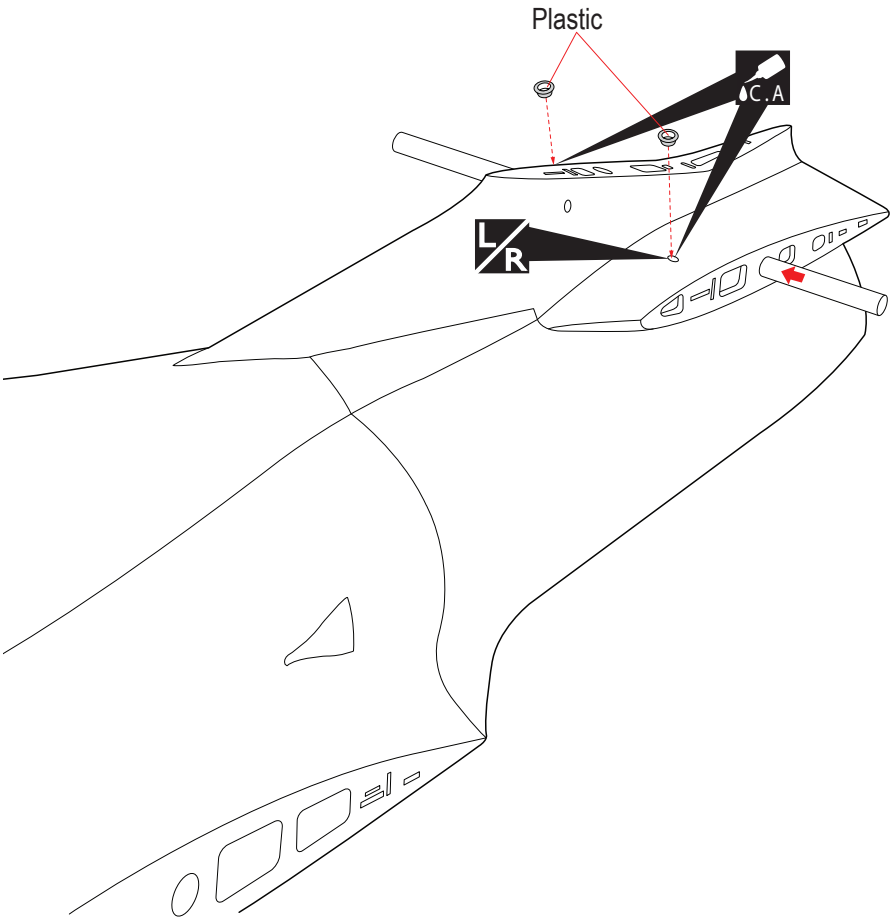

Top view

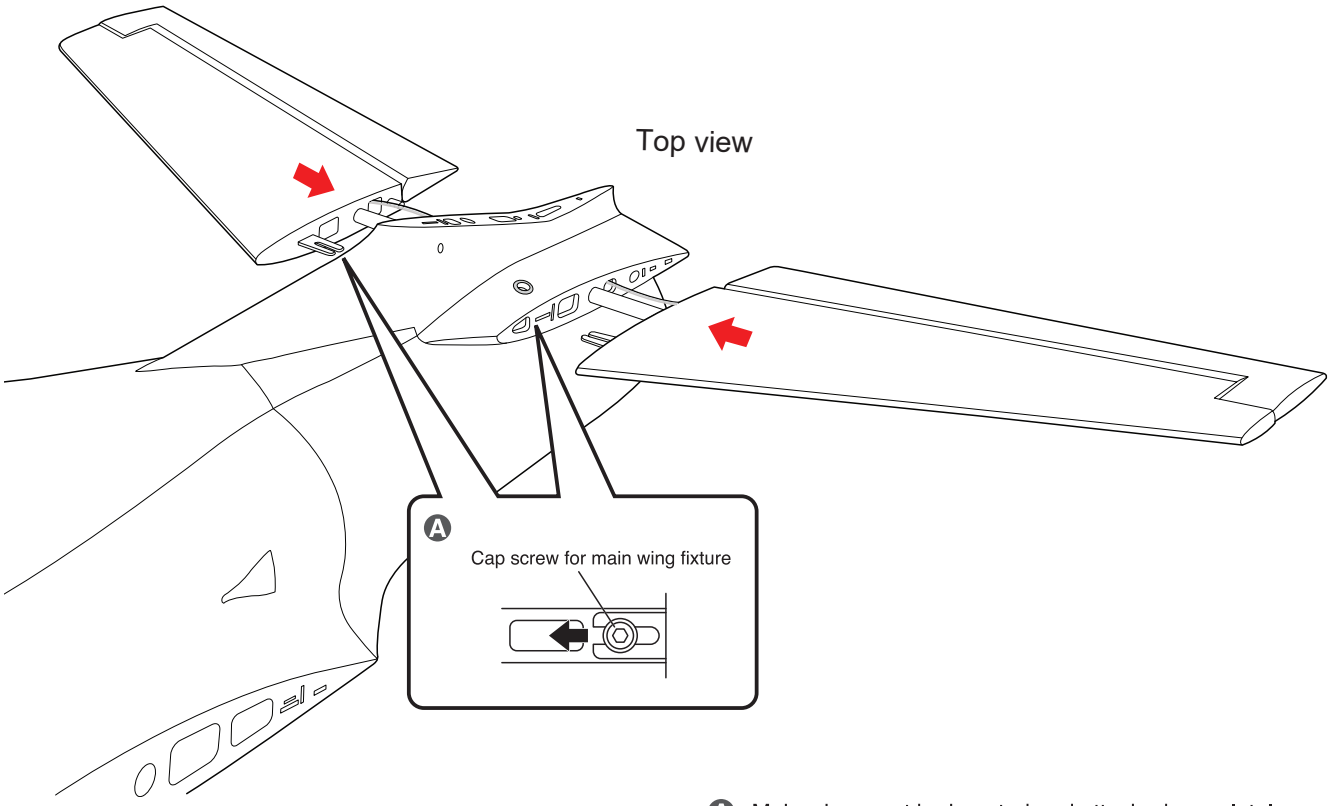

A Main wing must be inserted and attached completely before fixing with screw.

L/R Assemble left and right sides the same way

C.A Apply instant glue (C.A glue, super glue).

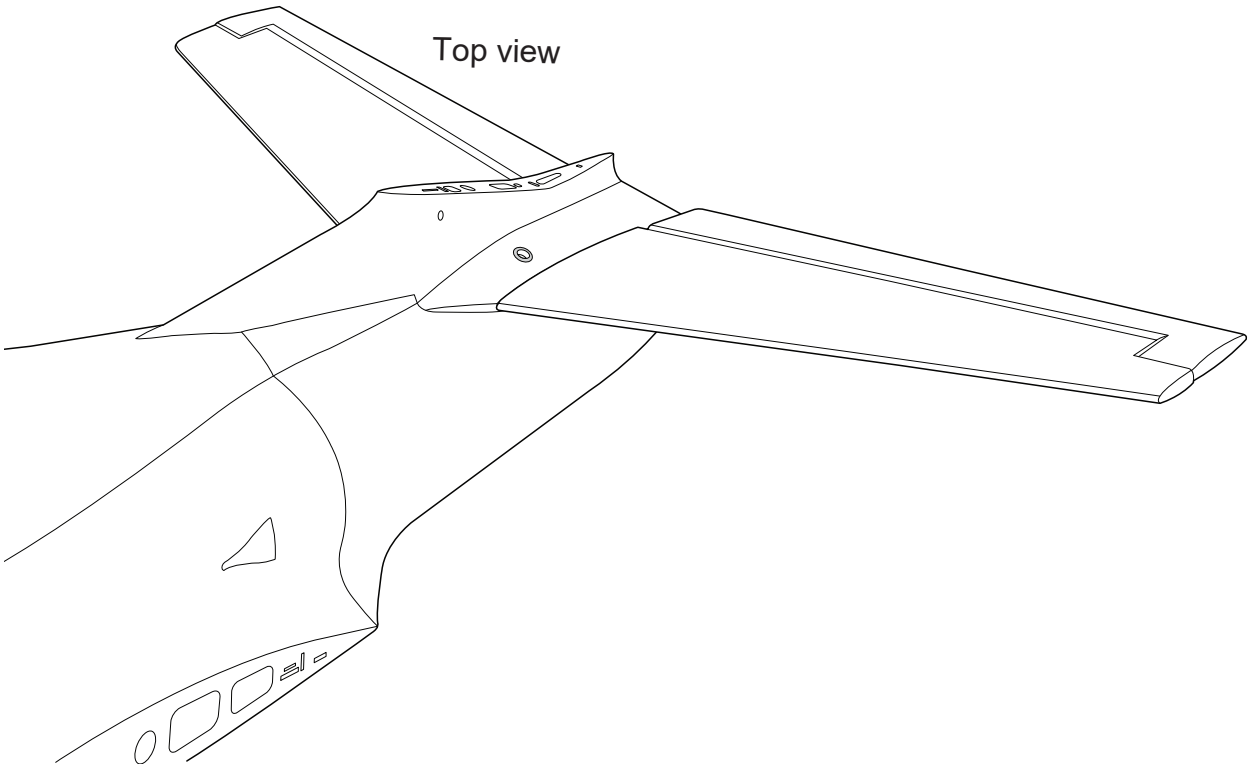

INSTALLATION THE VERTICAL STABILIZER

Pinned hinge

 ----------4

Hinges for Rudder are glued the same way as the aileron before.

Cut off shaded portion carefully.

Apply epoxy glue.

Assemble left and right sides the same way.

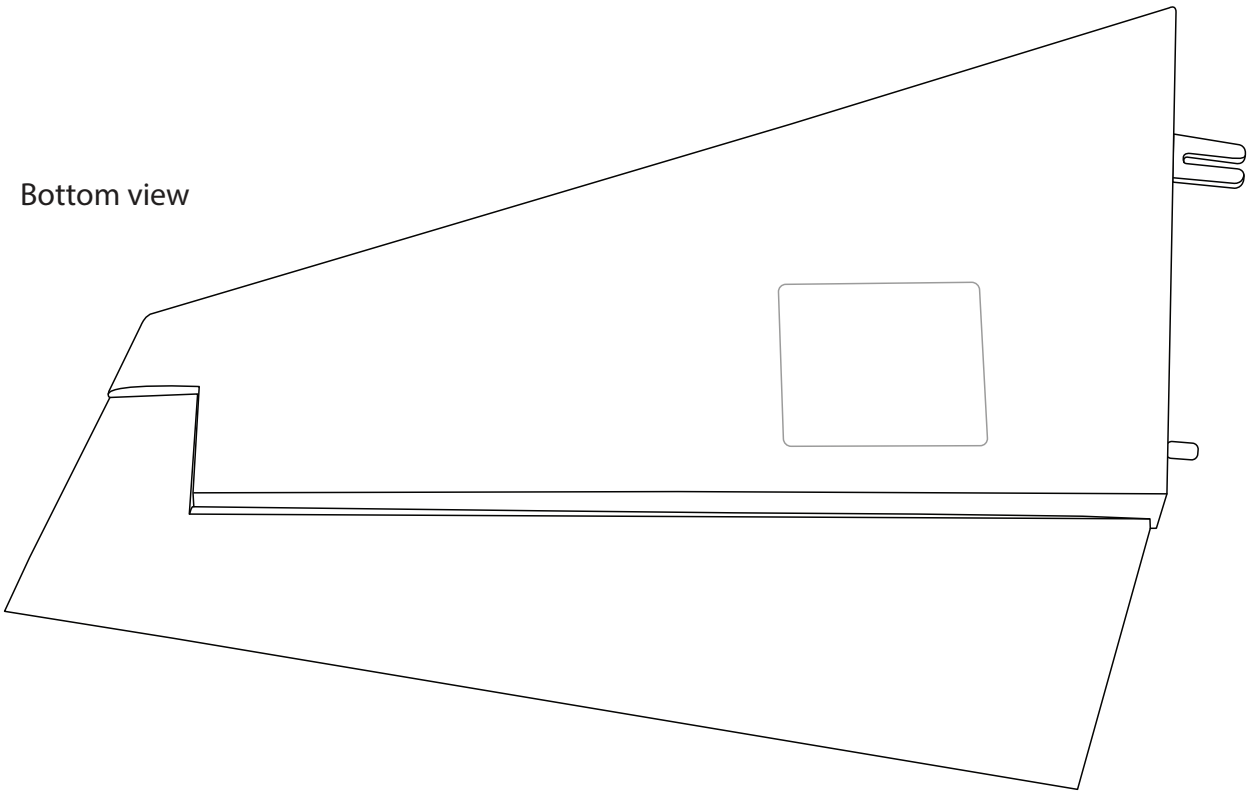

INSTALLATION THE VERTICAL STABILIZER SERVO

1. Install the rubber grommets and brass eyelets onto the aileron servo.
2. Using a modeling knife, remove the covering from over the pre-cut servo arm exit hole on the vertical stabilizer servo tray / hatch. This hole will allow the servo arm to pass through when installing the aileron pushrods.
3. Place the servo into the servo tray. Center the servo within the tray and drill pilot holes through the block of wood for each of the four mounting screws provided with the servo.
4. Using the thread as a guide and using masking tape, tape the servo lead to the end of the thread: carefully pull the thread out. When you have pulled the servo lead out, remove the masking tape and the servo lead from the thread.
5. Place the vertical stabilizer servo tray / hatch into the servo box on the bottom of the wing and drill pilot holes through the tray and the servo box for each of the four mounting screws. Secure the servo tray in place using the mounting screws provided.

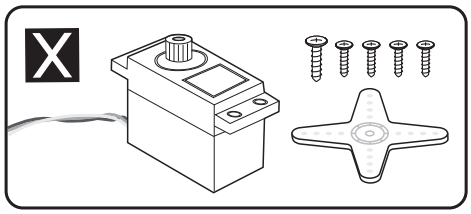

Cut off shaded portion carefully.

Must be purchased separately!

Assemble left and right sides the same way.

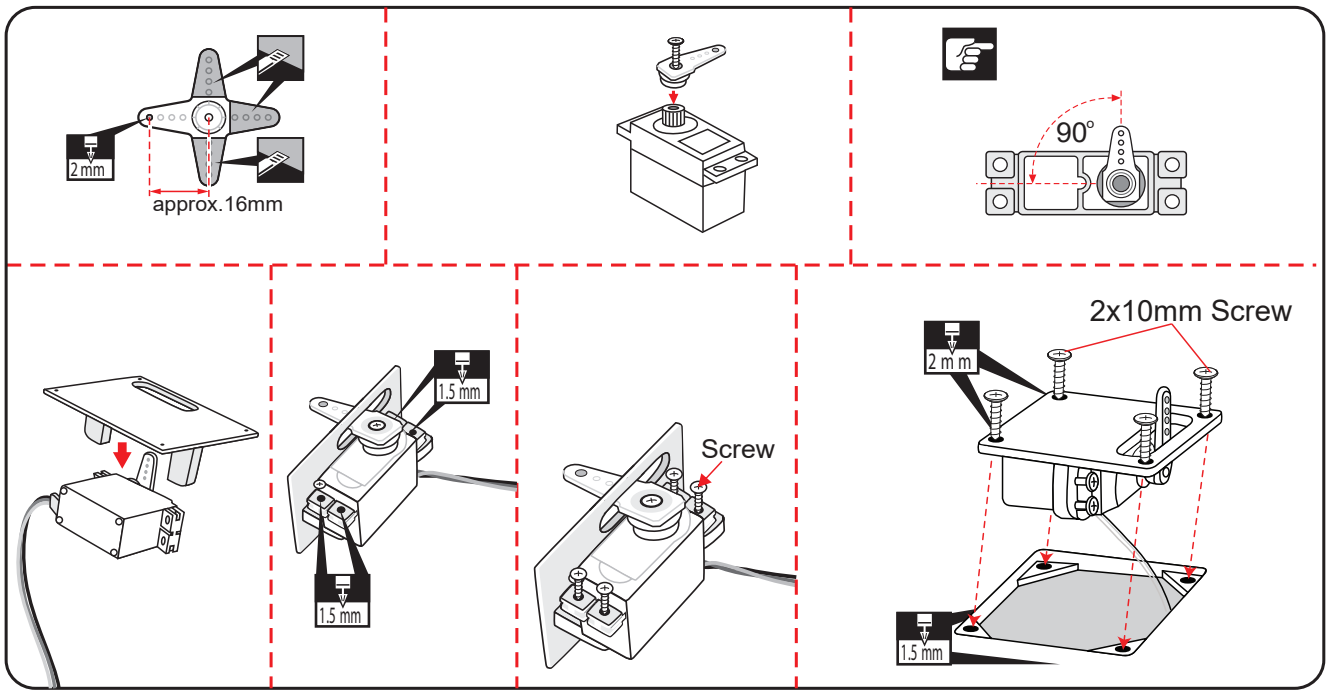

2 x 10mm Screw - - - - 4

Warning!

Set all scerws securely. If they come off during flight you will lose control of your aircraft!

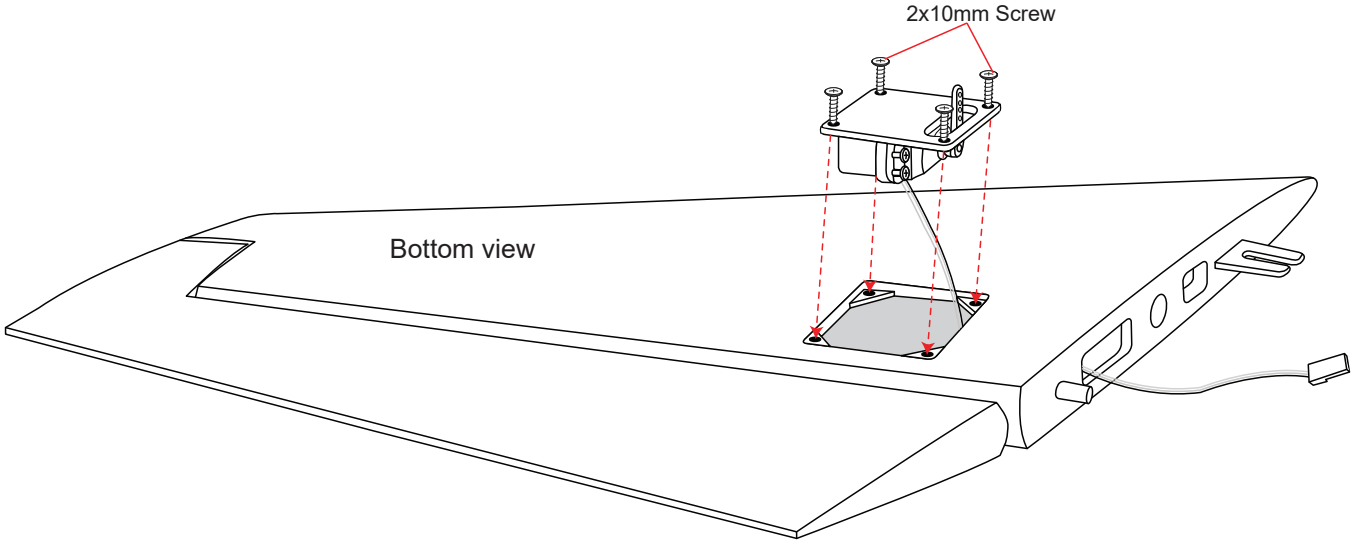

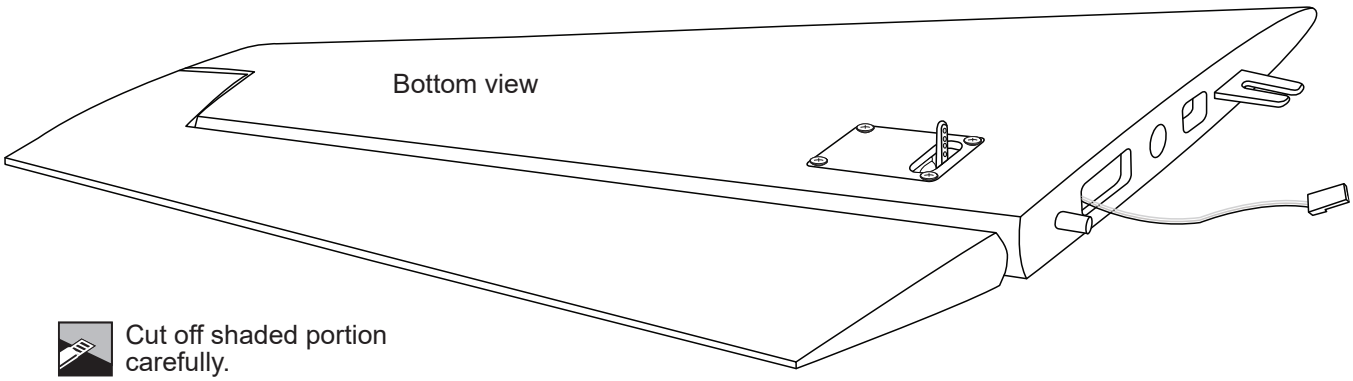

Cut off shaded portion carefully.

Pay close attention here.

1.5mm Drill holes using the stated. (in this case 1.5mm Ø).

INSTALLATION THE VERTICAL STABILIZER LINKAGES

1. Install the control horn into the vertical stabilizer.
2. Locate the metal rod wire, screw the plastic link ball onto the threaded end of the wire.
3. Plug the vertical stabilizer servo into the receiver and center the servo. Install the servo arm onto the servo. The servo arm should be perpendicular to the servo and point toward the middle of the rudder.
4. Center the aileron and hold it in place using a couple of pieces of masking tape. Adjust the linkage until the vertical stabilizer and the servo arm are both centered and then tighten the nut against. Remember use thread locking compound to secure.
5. Repeat step 1 - step 4 for the second vertical stabilizer linkage.

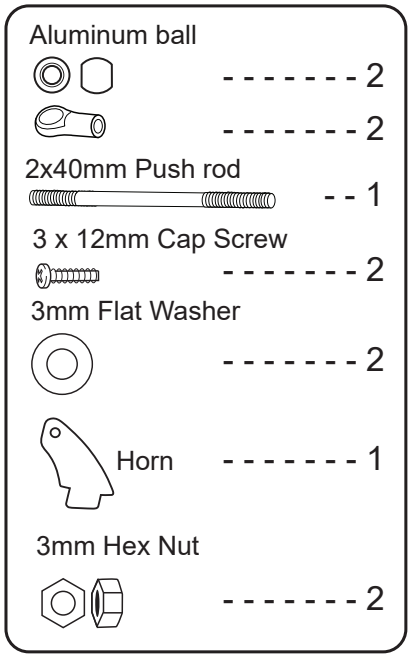

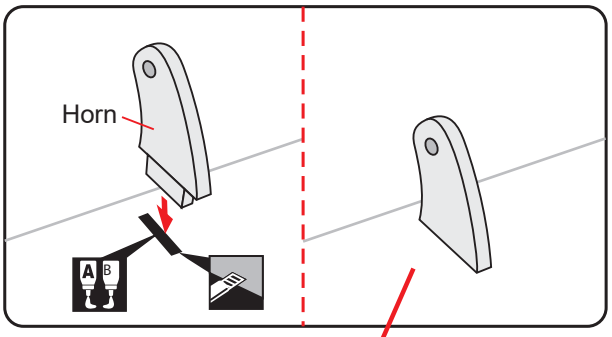

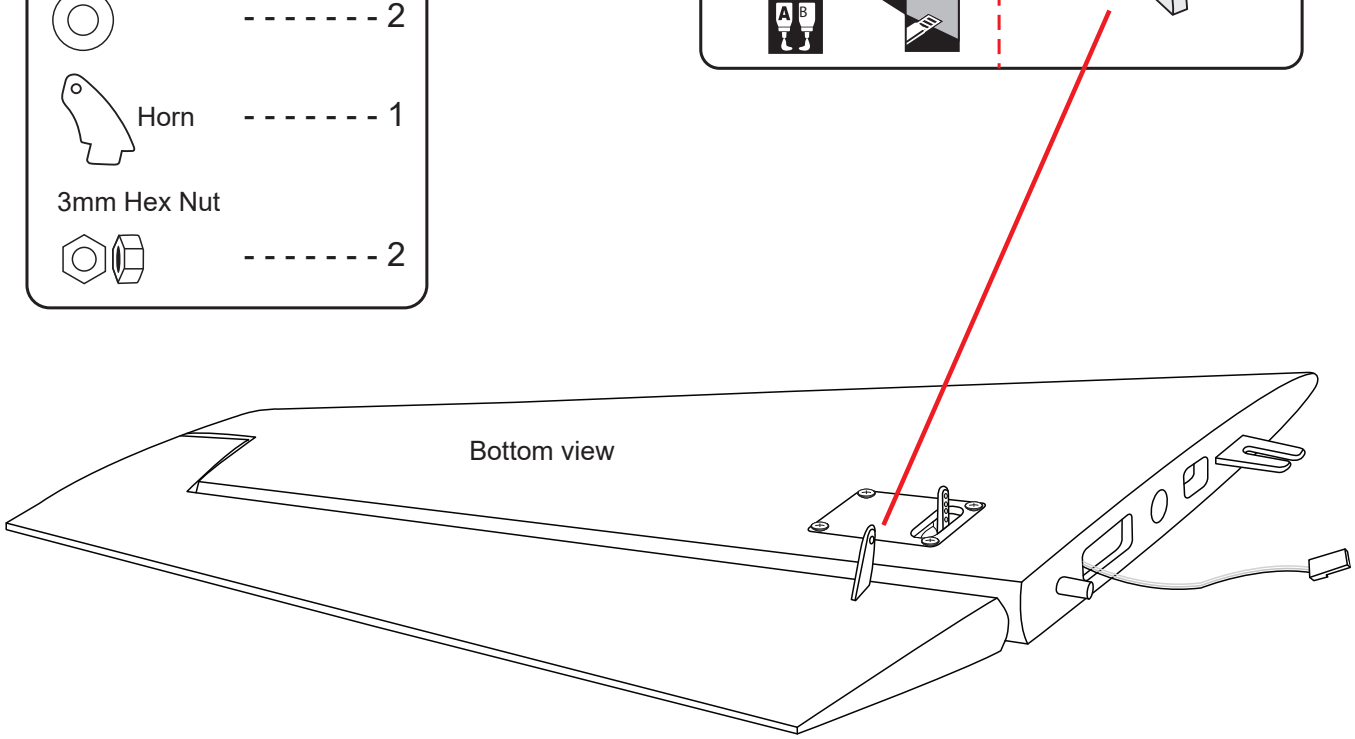

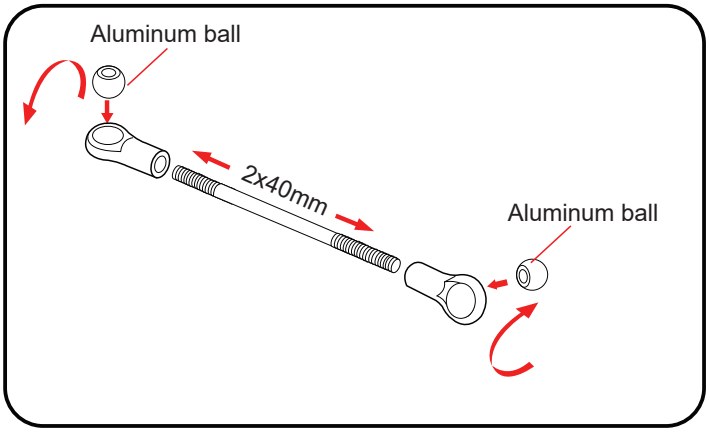

Cut off shaded portion

Apply epoxy glue.

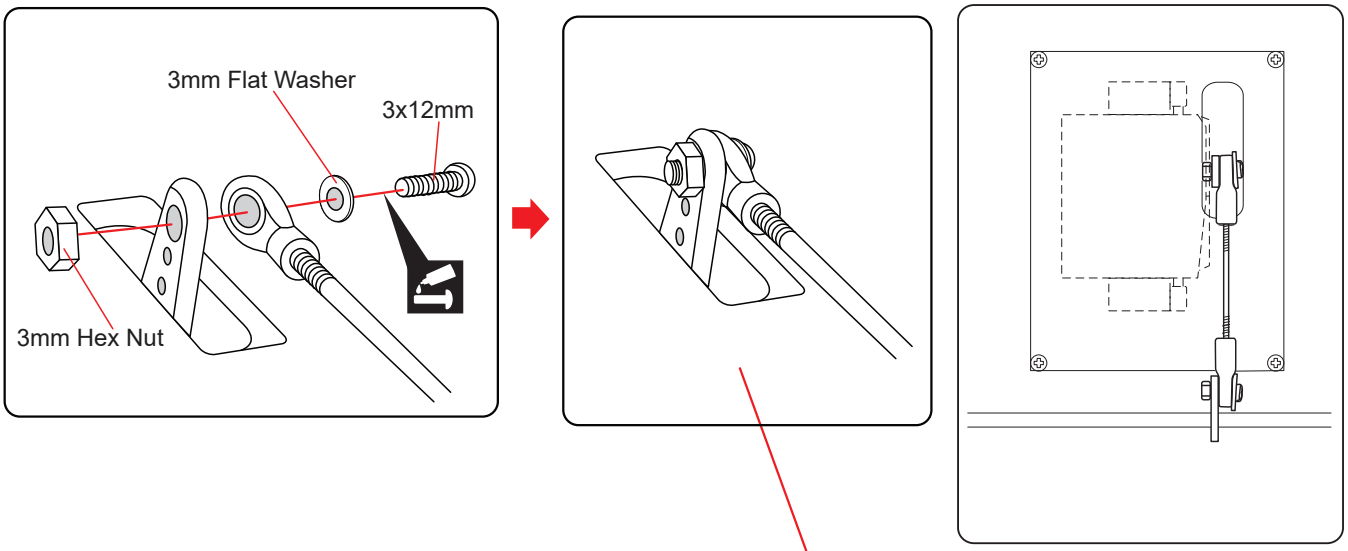

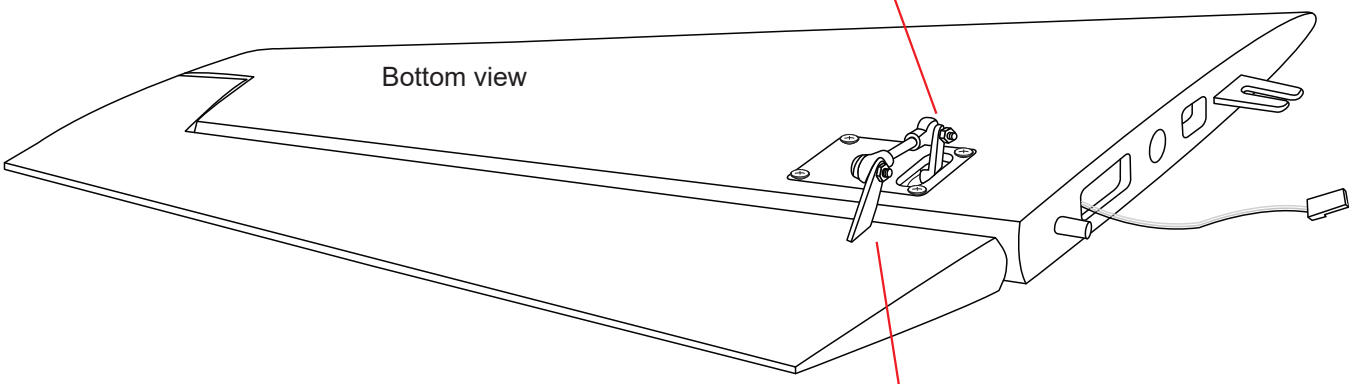

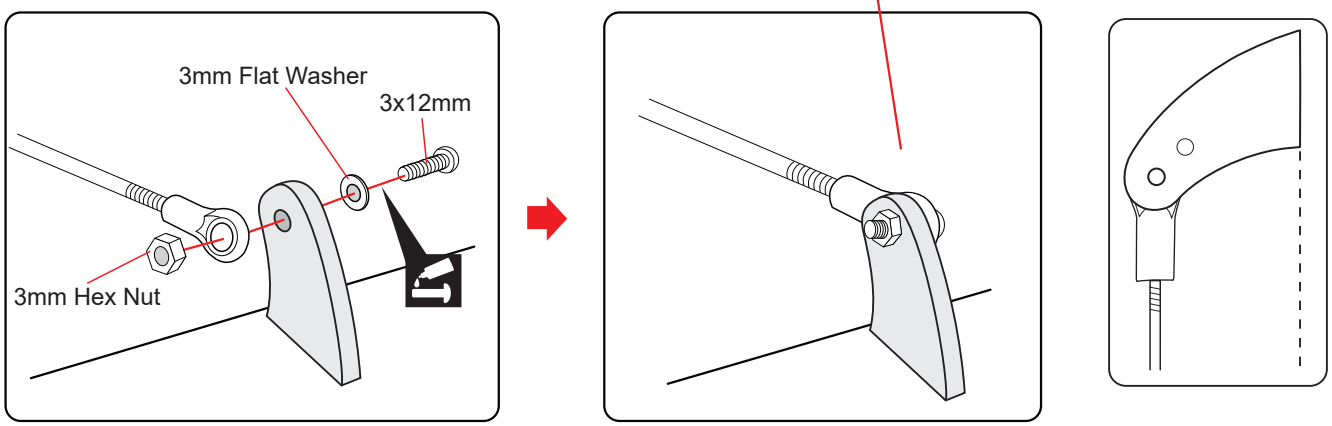

Apply threadlocker (screw cement).

Aluminium tube. ⌀12mm
115mm

Plastic ---------- 1

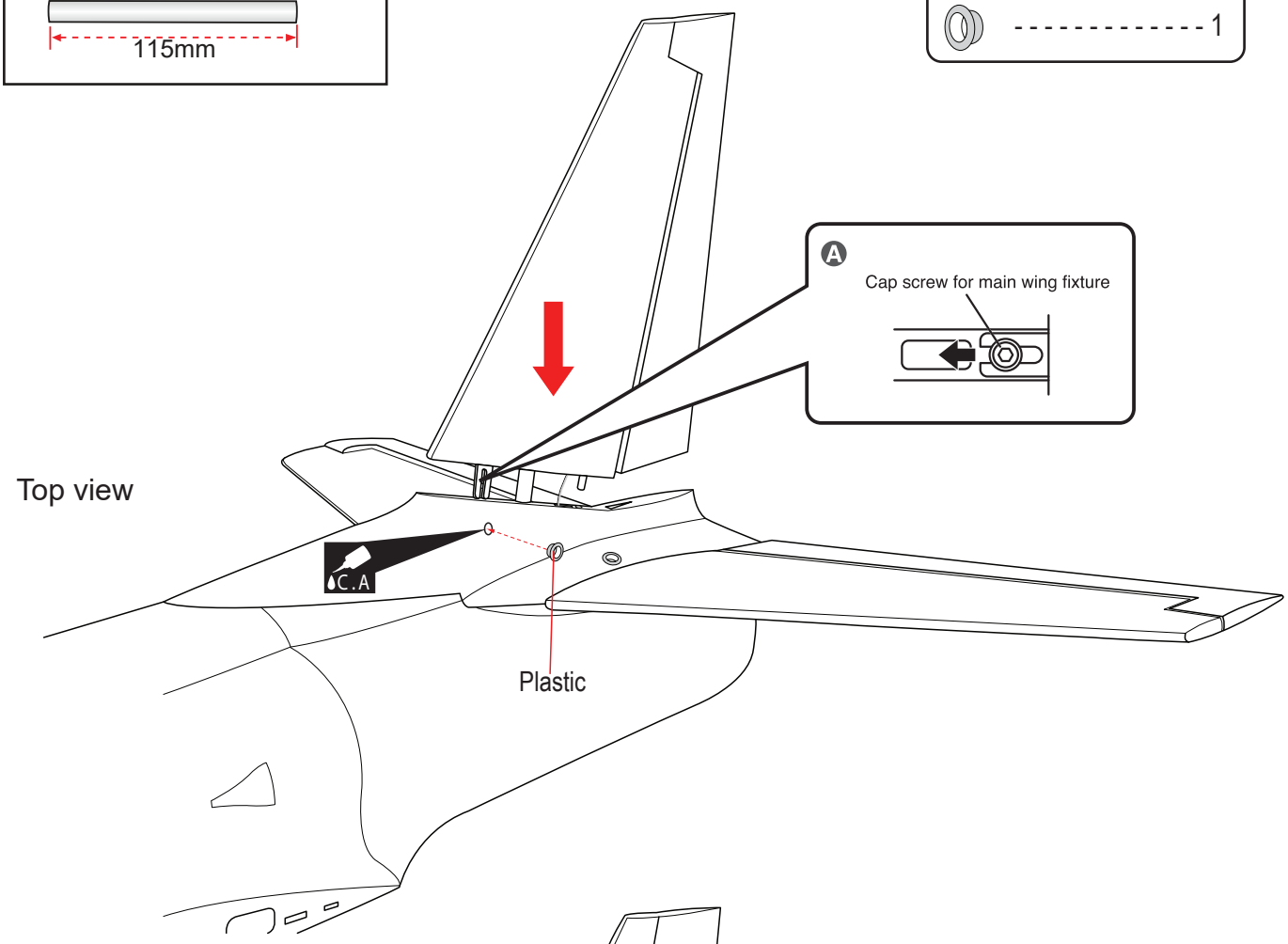

Top view

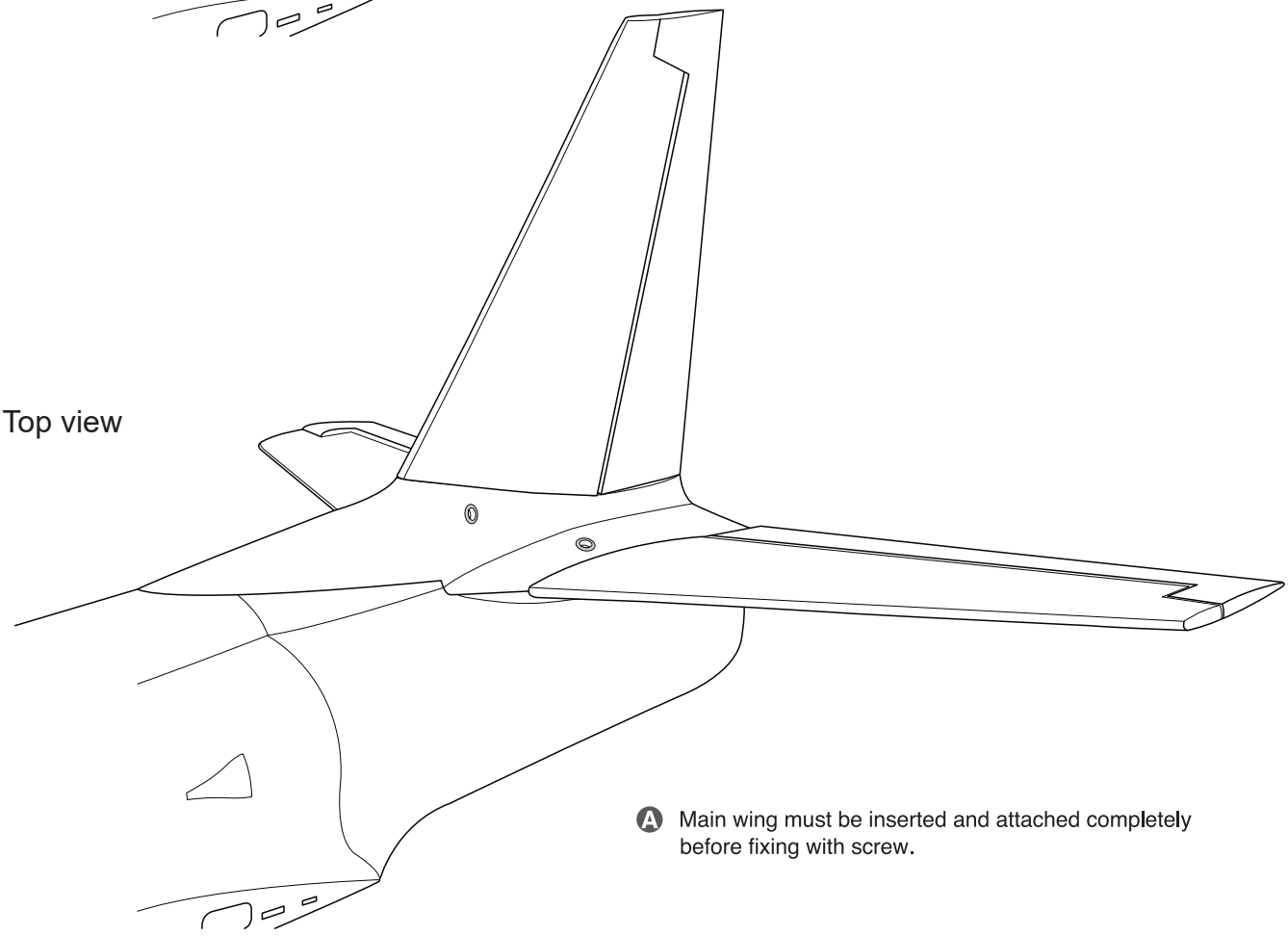

Top view

Ⓐ Main wing must be inserted and attached completely before fixing with screw.

Ply Wood part for rudder stab

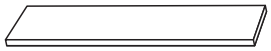

- - - - - - - - - 1

Top view

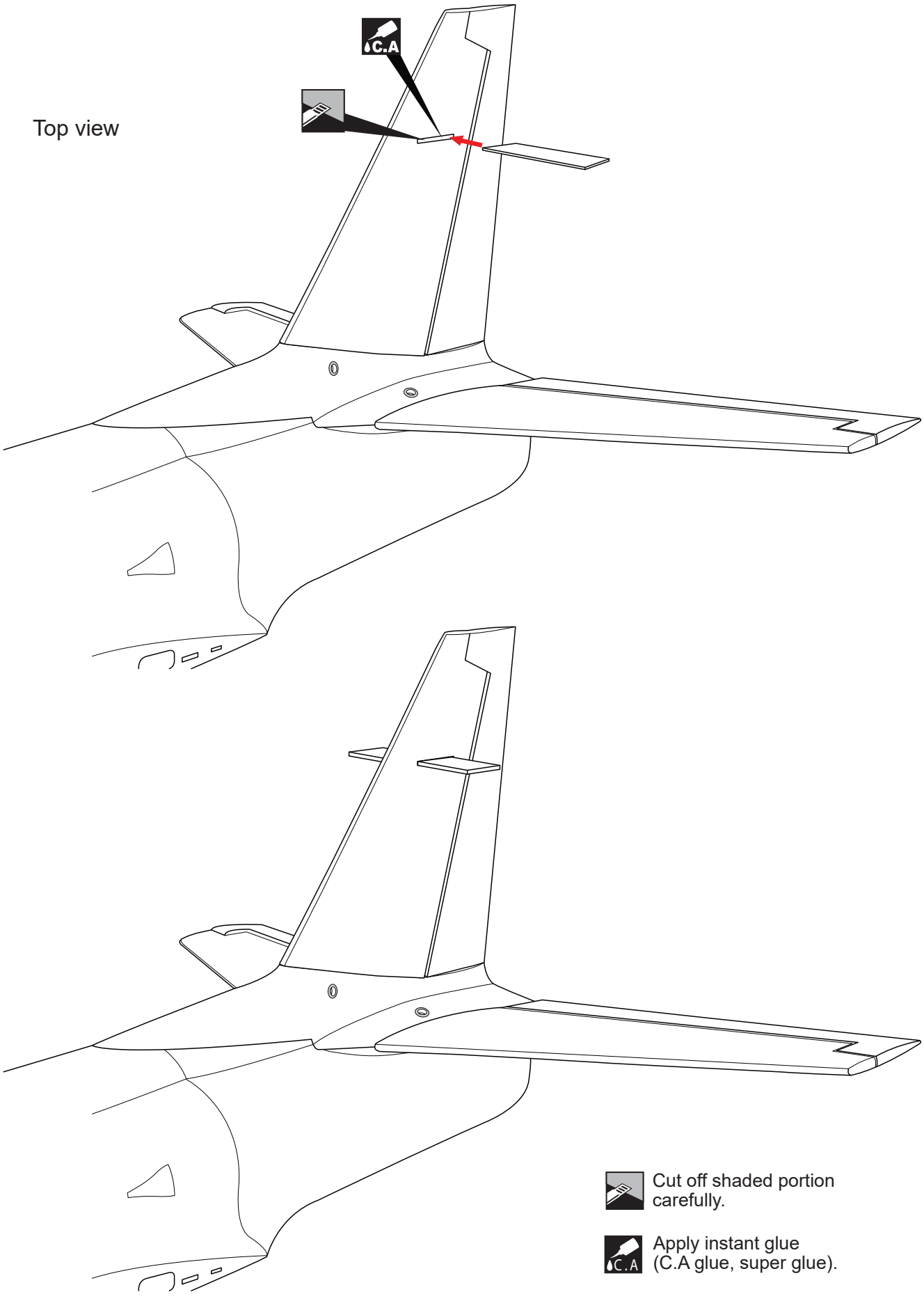

Cut off shaded portion carefully.

Apply instant glue (C.A glue, super glue).

INSTALLING THE NOSE GEAR RETRACT

Metal Clevis	2	5x30mm Socket Head Cap Screw	1	Wheel well	1
Cable rod	2	5mm Flat washer	1	4x4mm Setscrew	1
Locknut	4	3mm Flat washer	4		
3x30mm Connector	2	3x6mm Button screw	2		
		3x15mm screw	4		

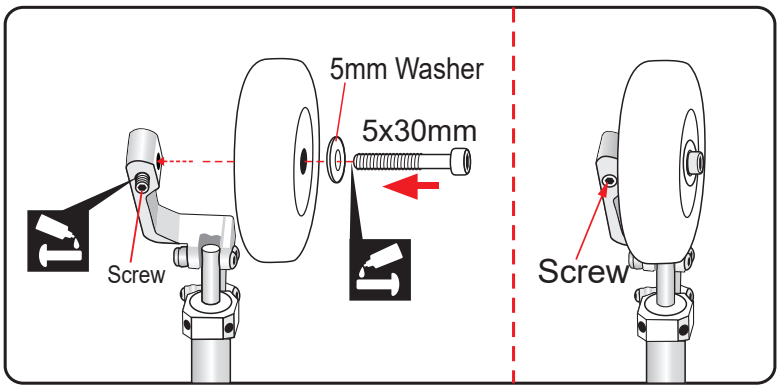

Bottom view

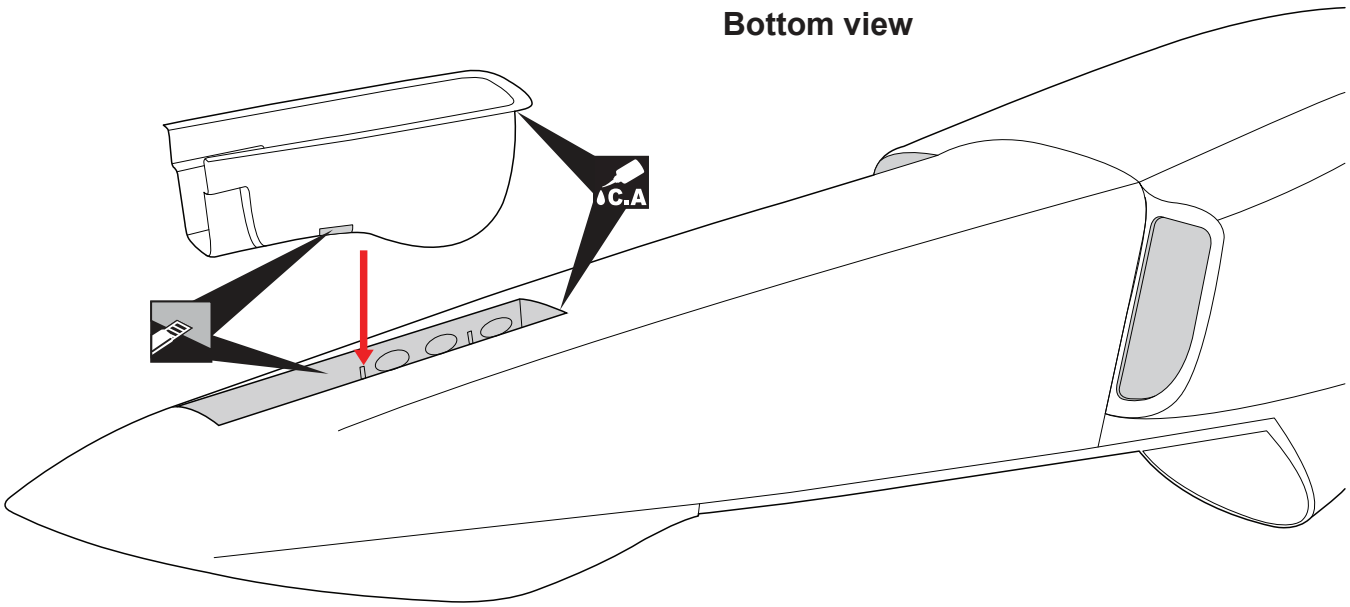

Apply threadlocker (screw cement).

Must be purchased separately!

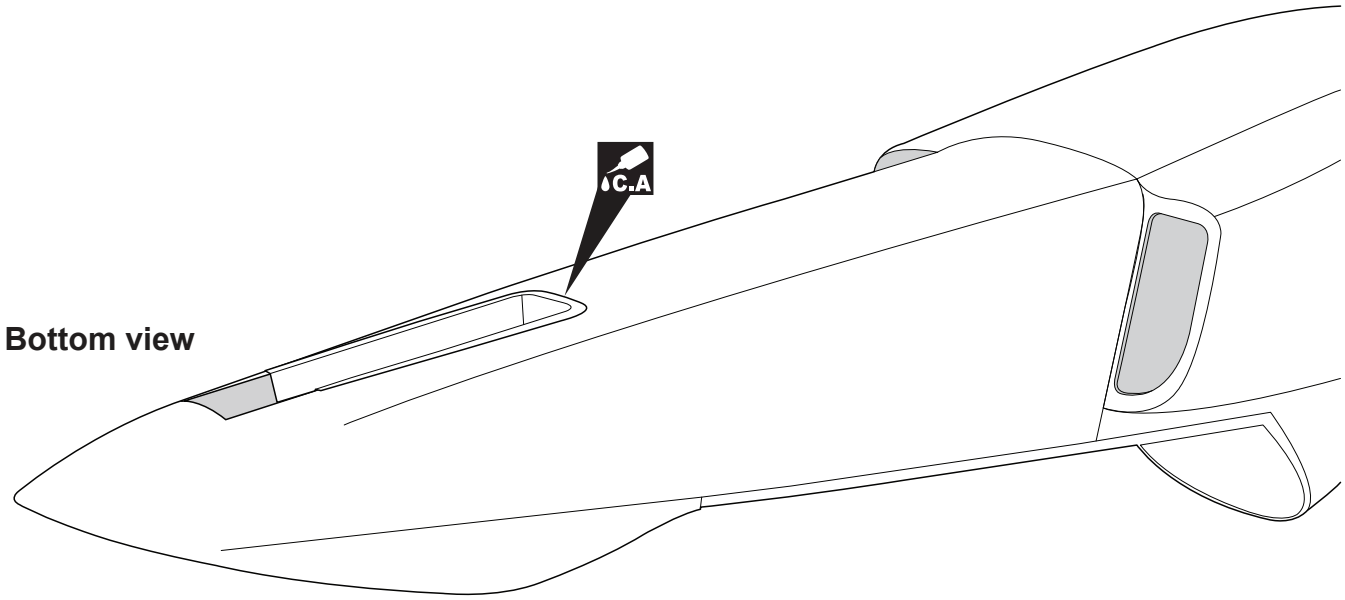

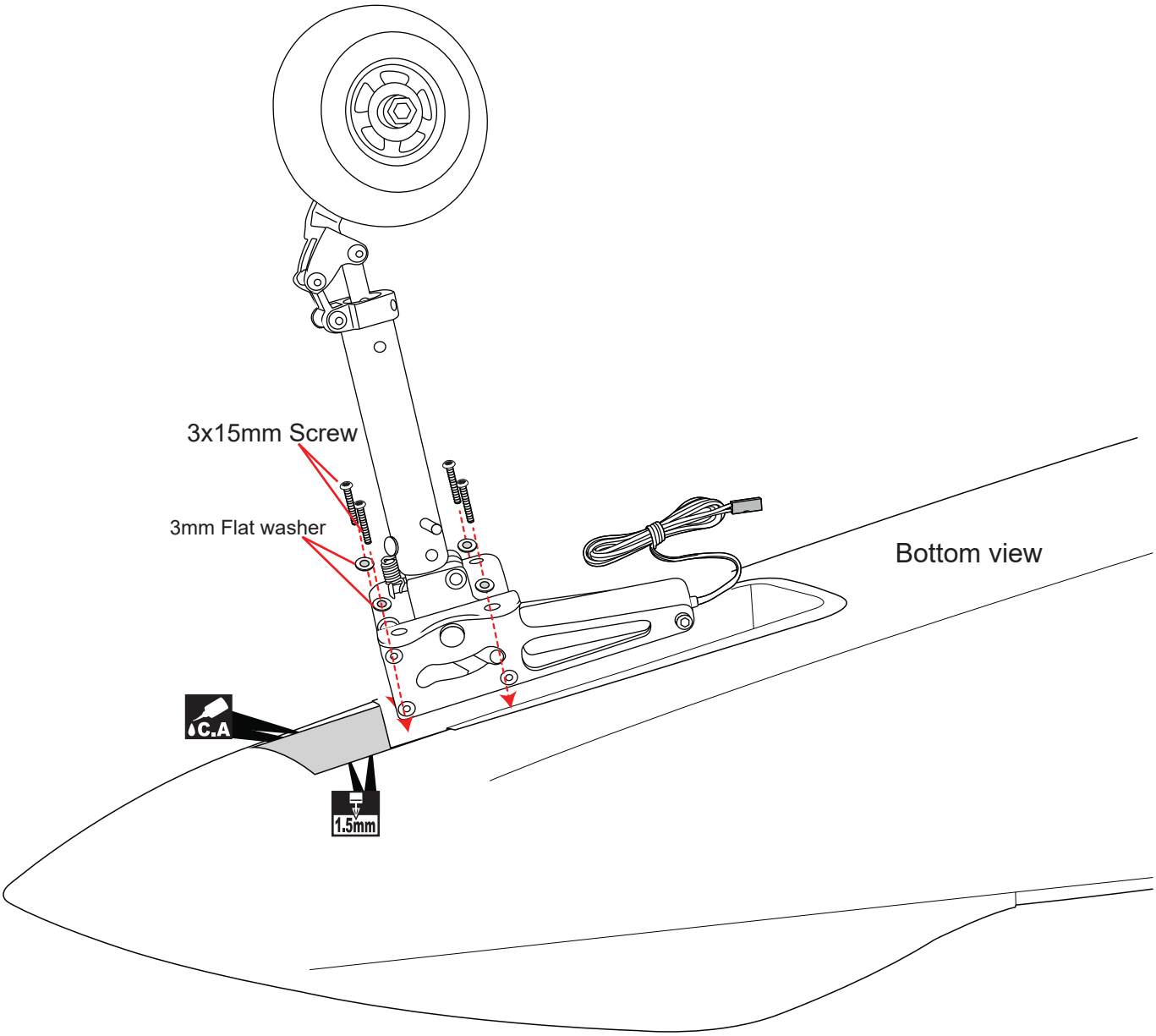

Cut off shaded portion carefully.

Apply instant glue (C.A glue, super glue).

Drill holes using the stated. (in this case 1.5mm Ø).

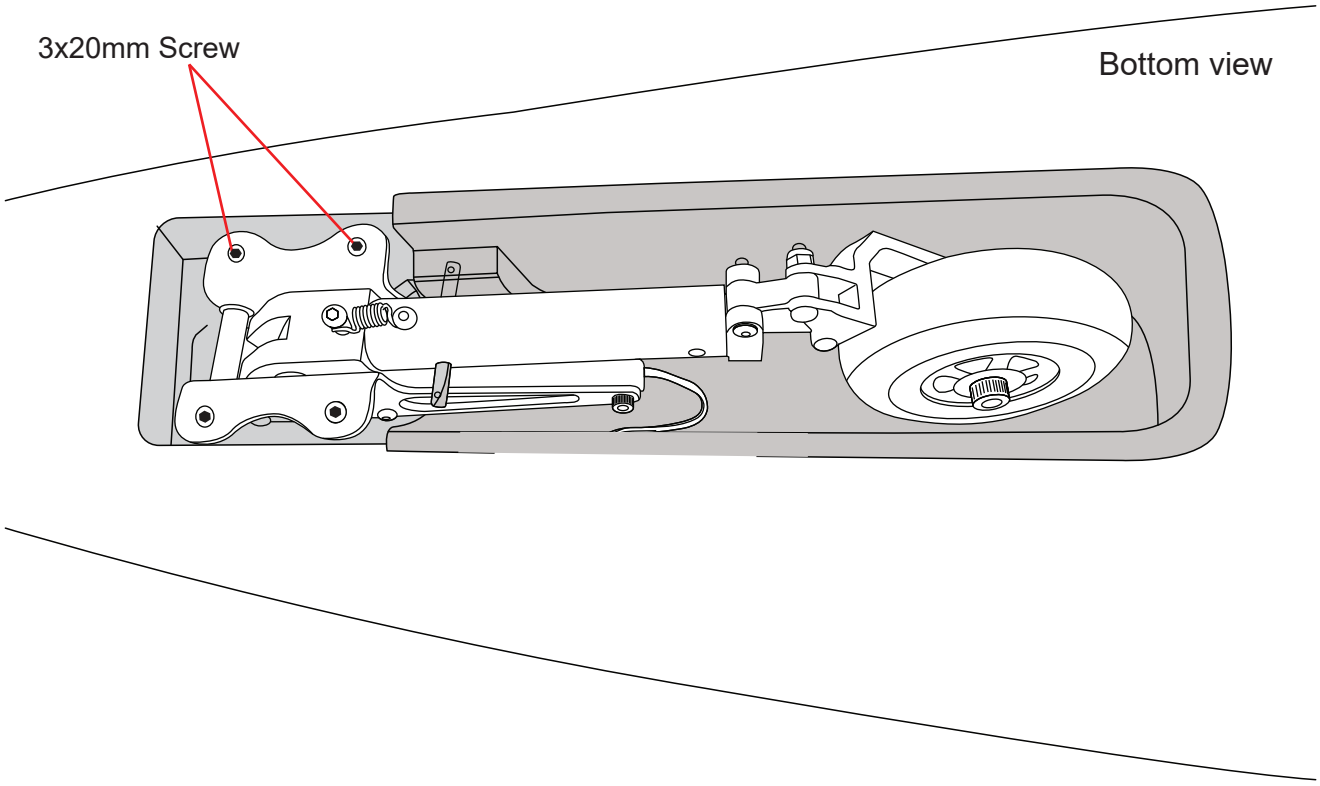

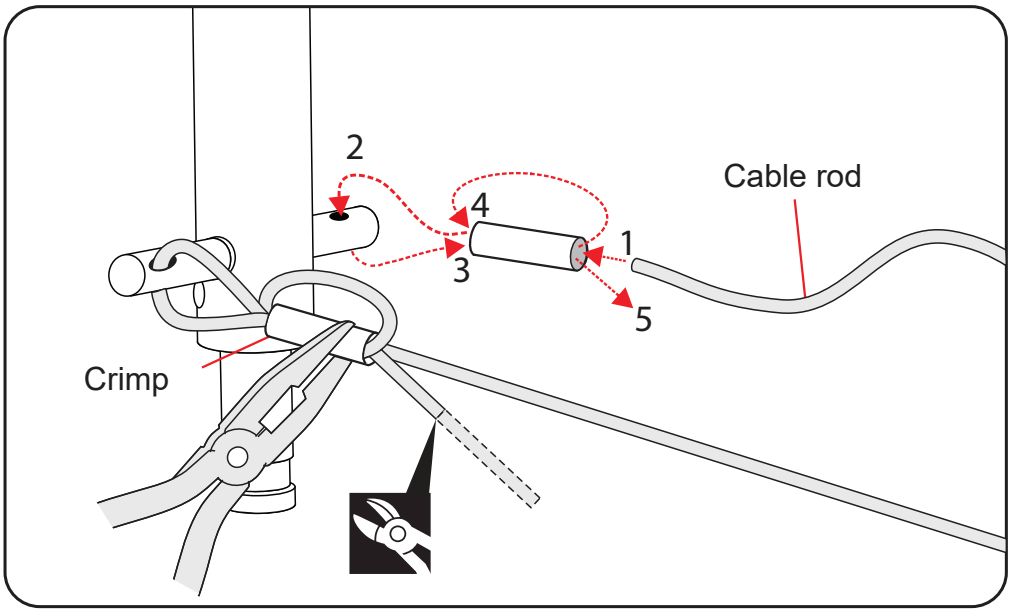

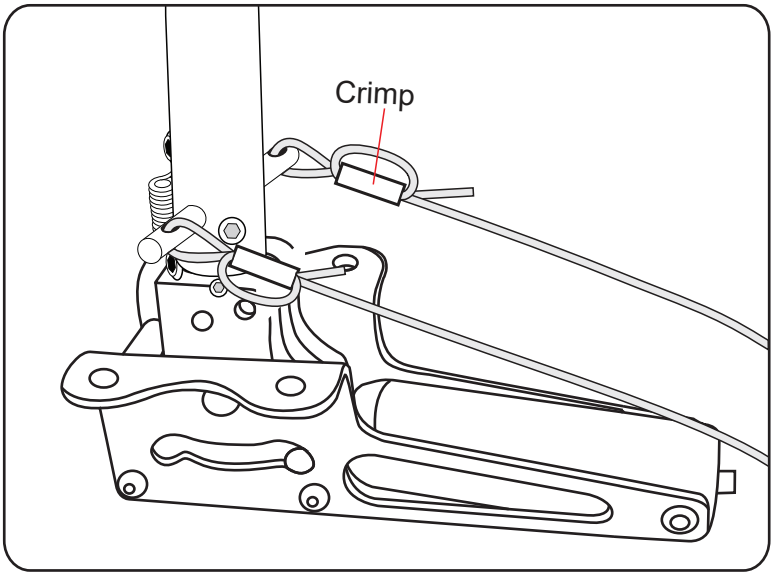

Cut off excess.

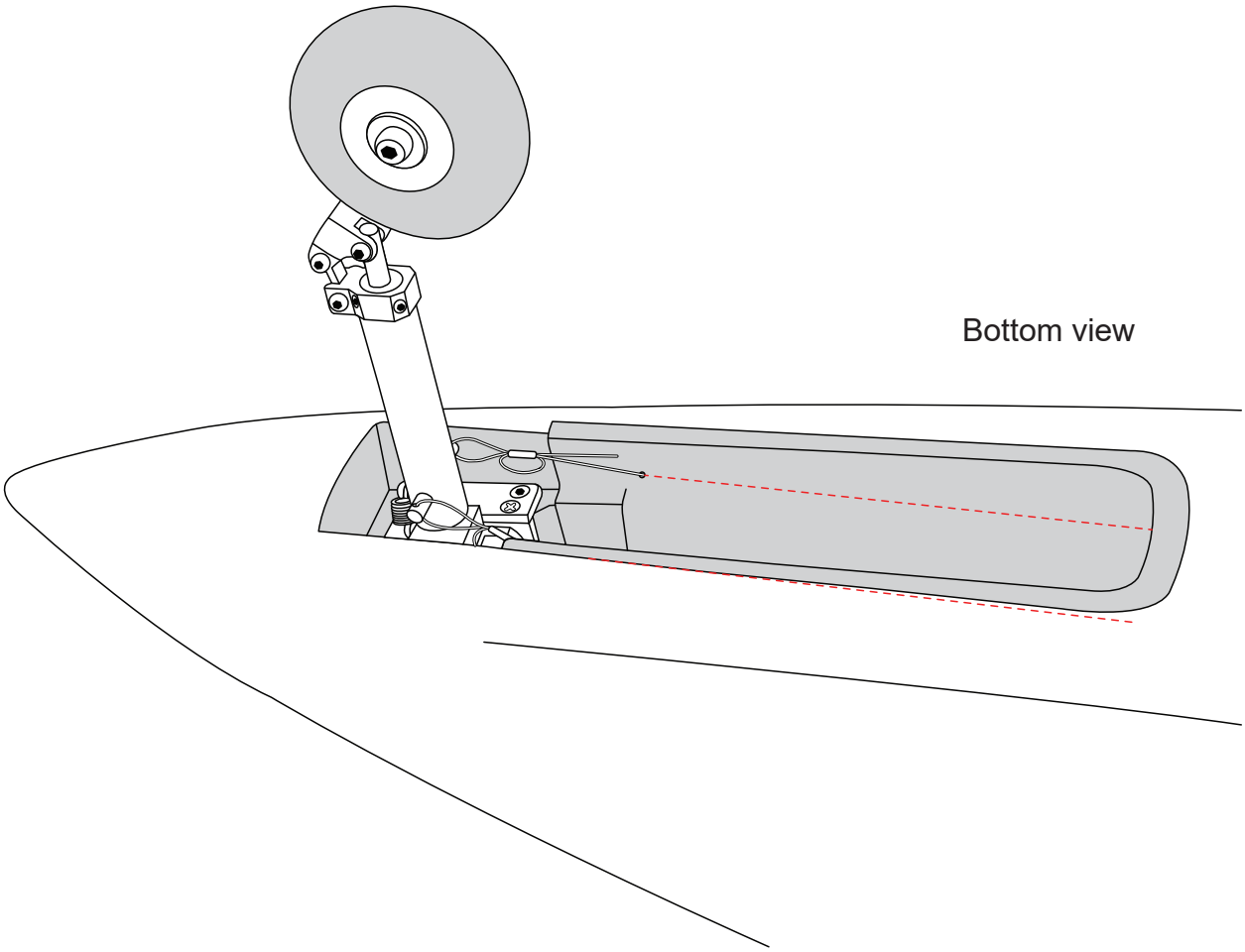

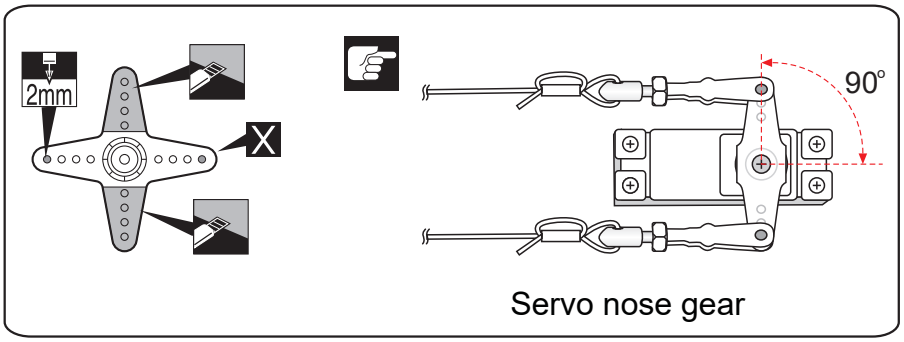

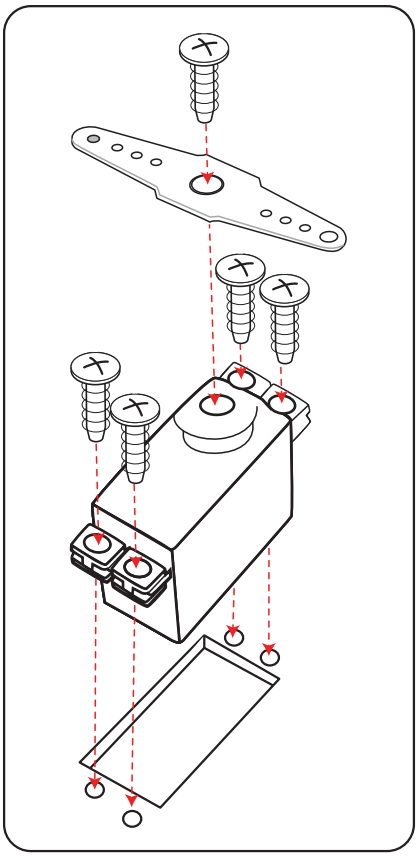

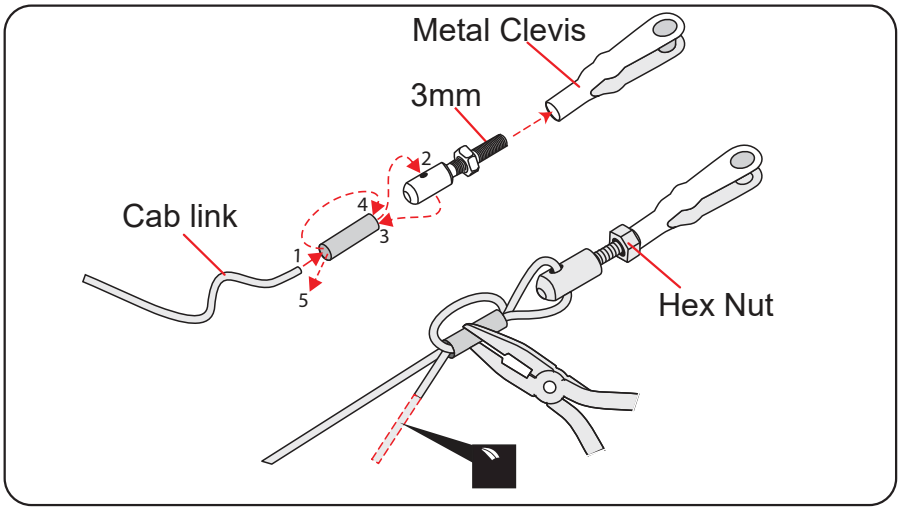

Cut off excess.

Cut off shaded portion carefully.

Must be purchased separately!

Pay close attention here.

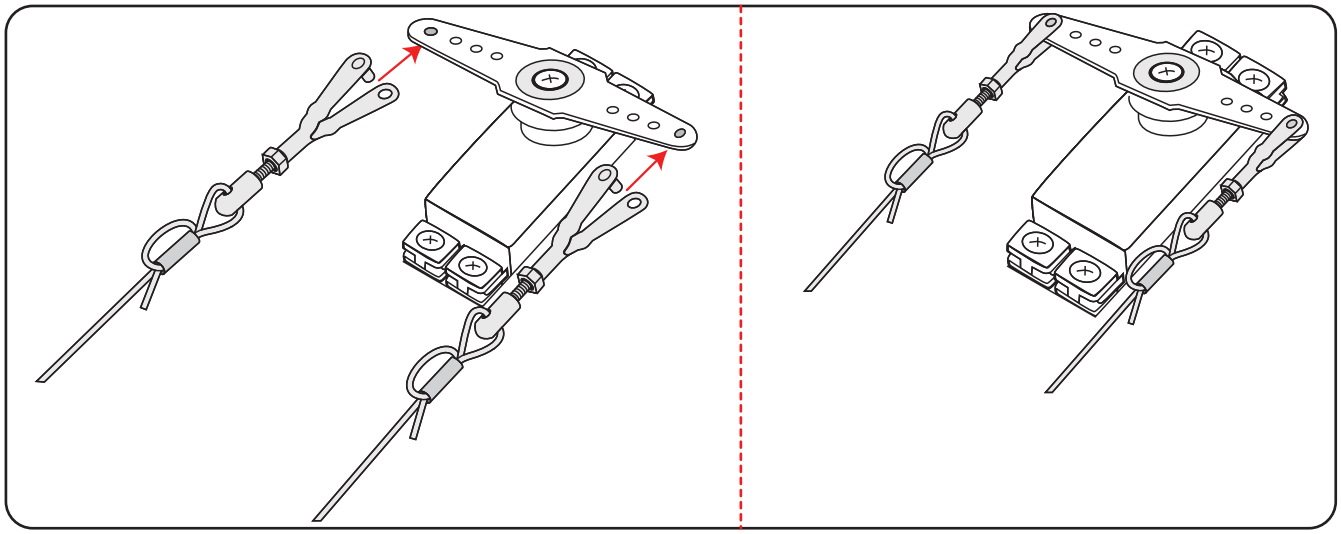

Top view

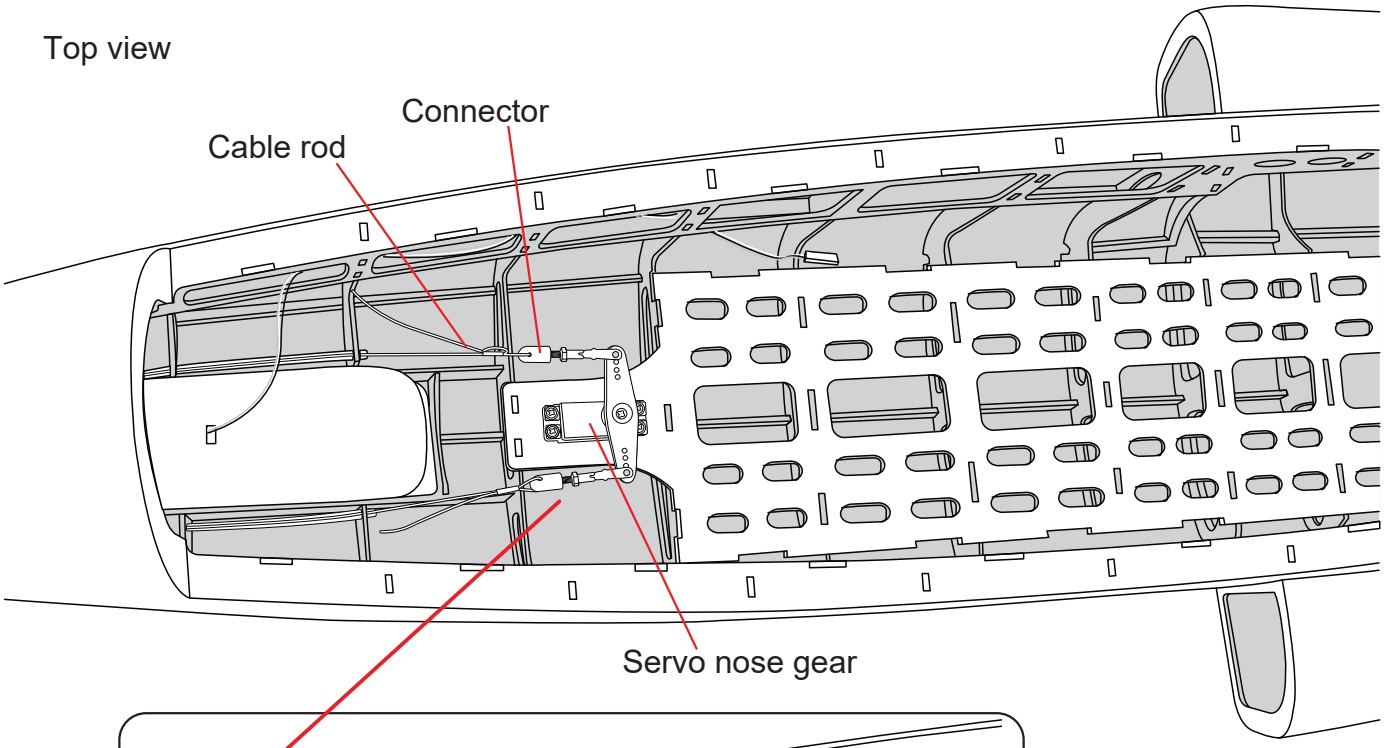

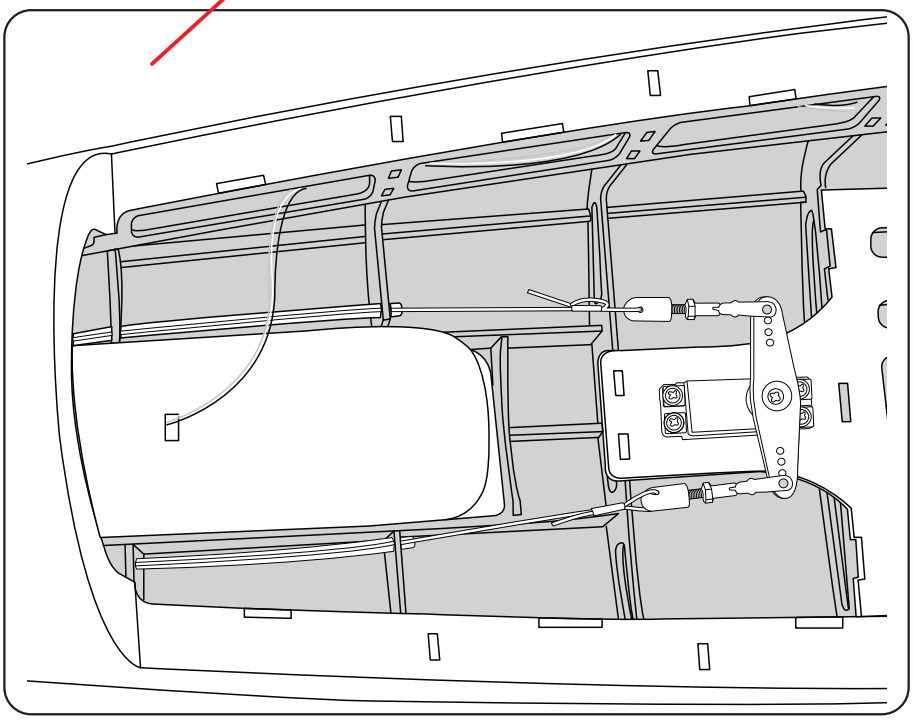

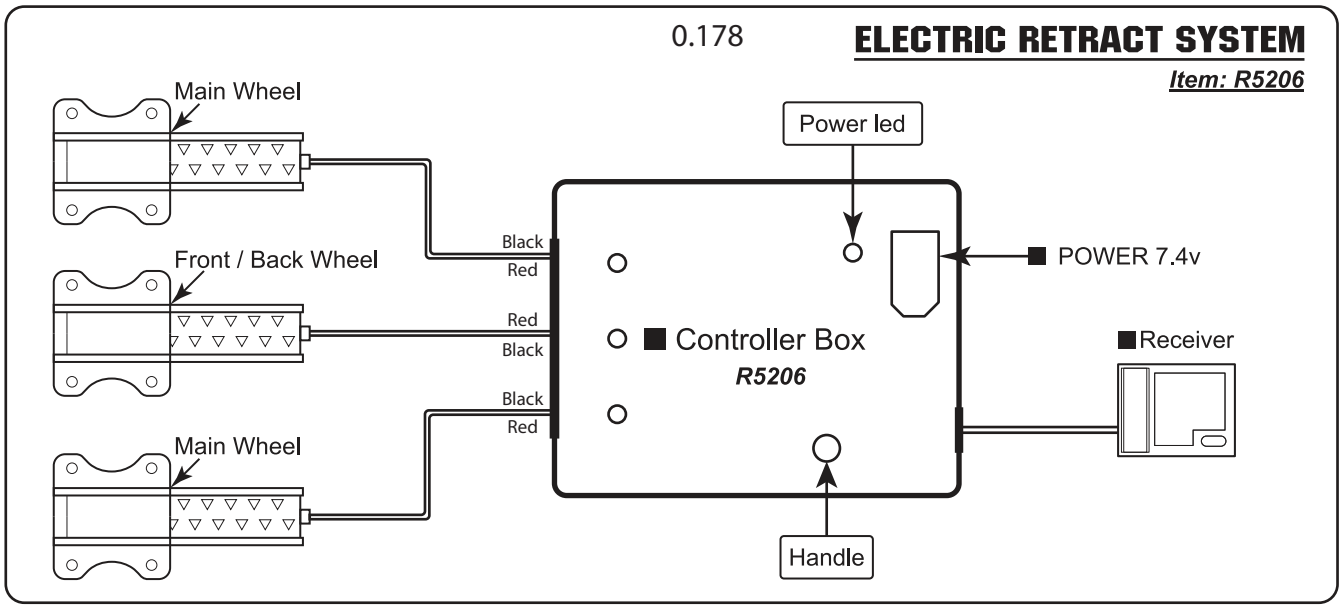

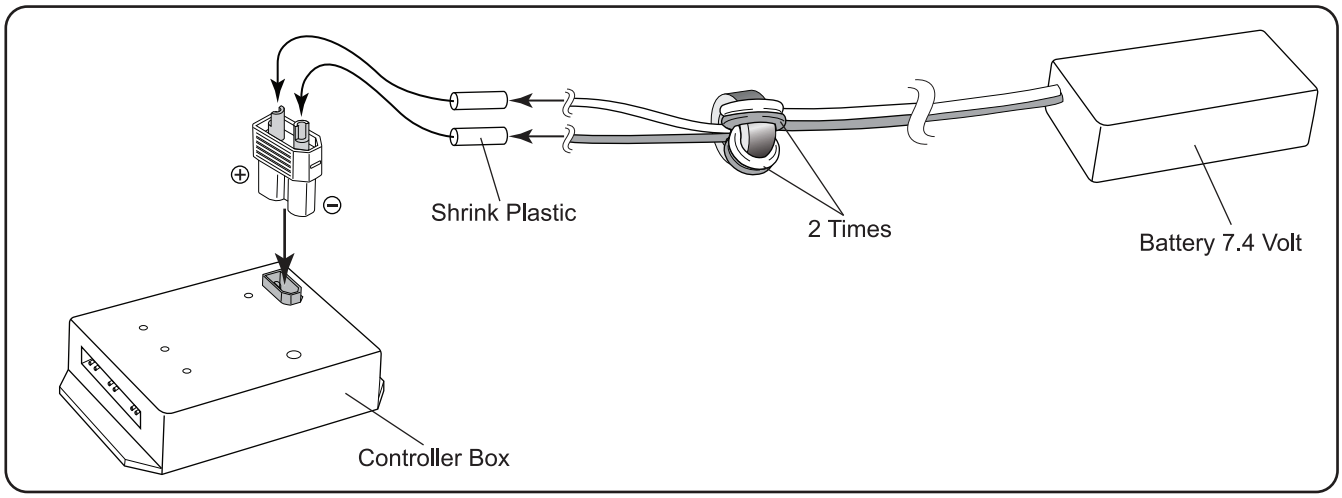

INSTALLING THE EDF AND LIP OF AIR INLET, OUTLET

Plastic air intake

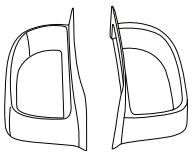

- - - - - - - - 2

Plastic air intake for cooling ESC



- - - - - - - - 2

Fiberglass air outflow

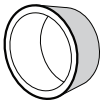

- - - - - - - - 1

Fiberglass intake

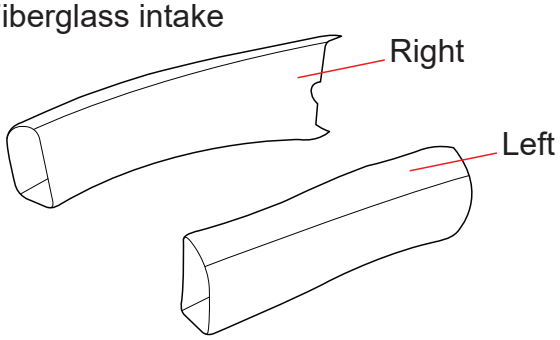

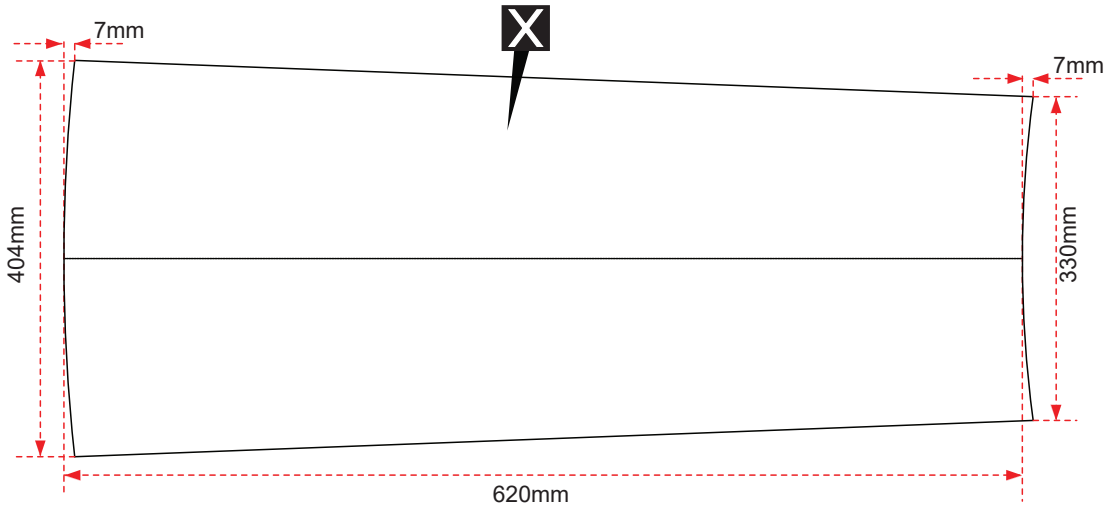

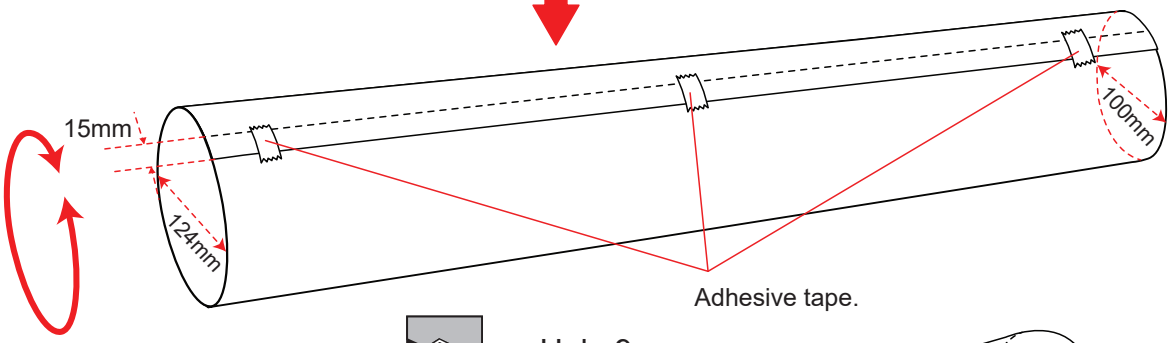

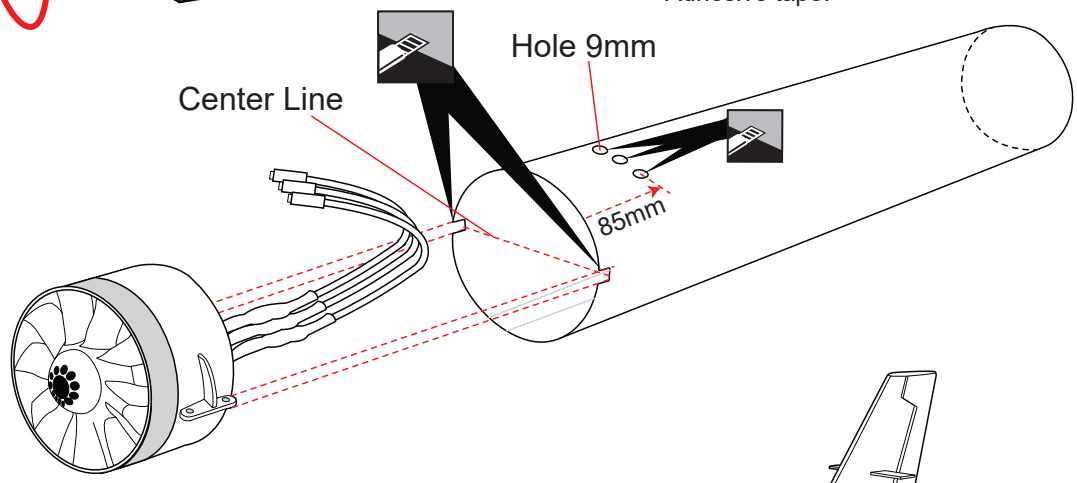

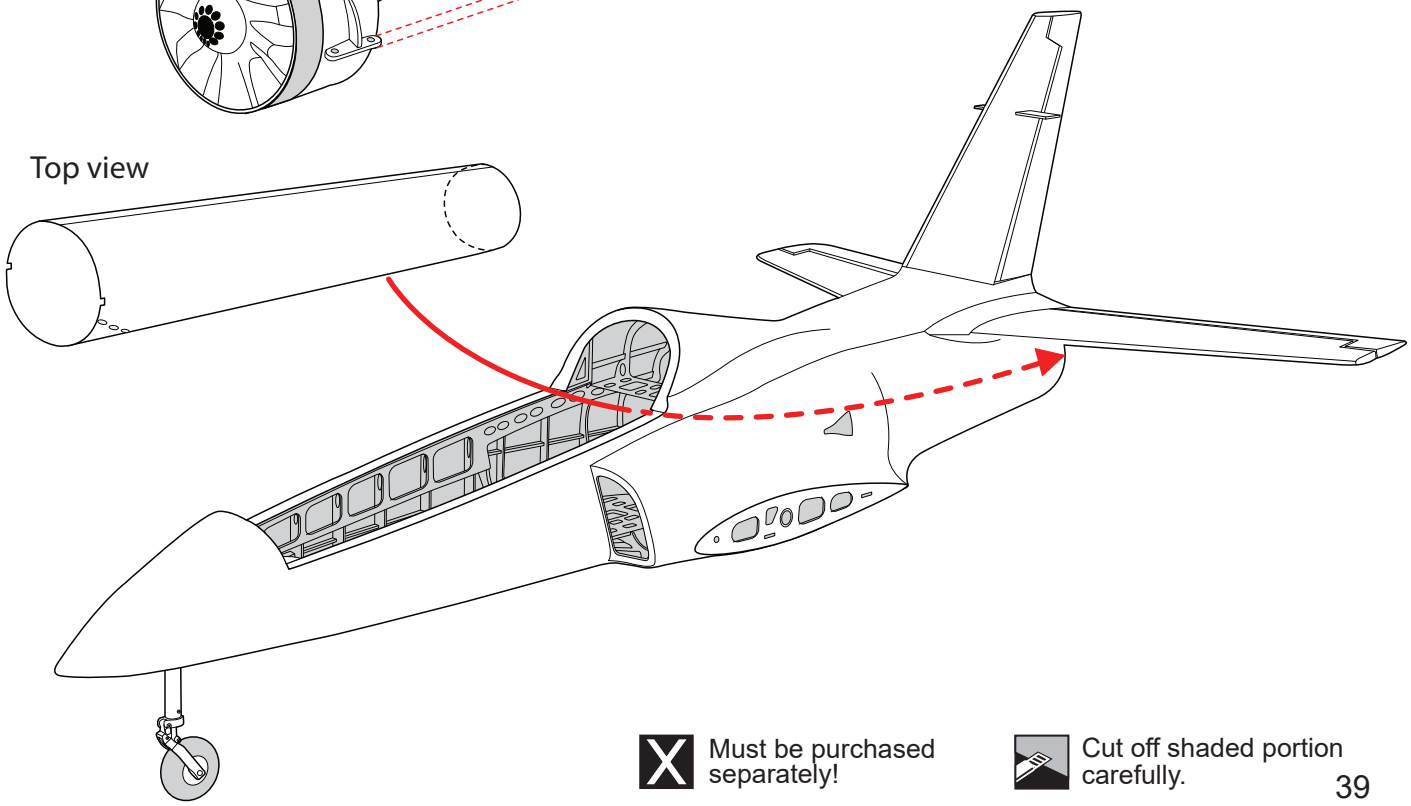

Must be purchased separately!

Cut off shaded portion carefully.

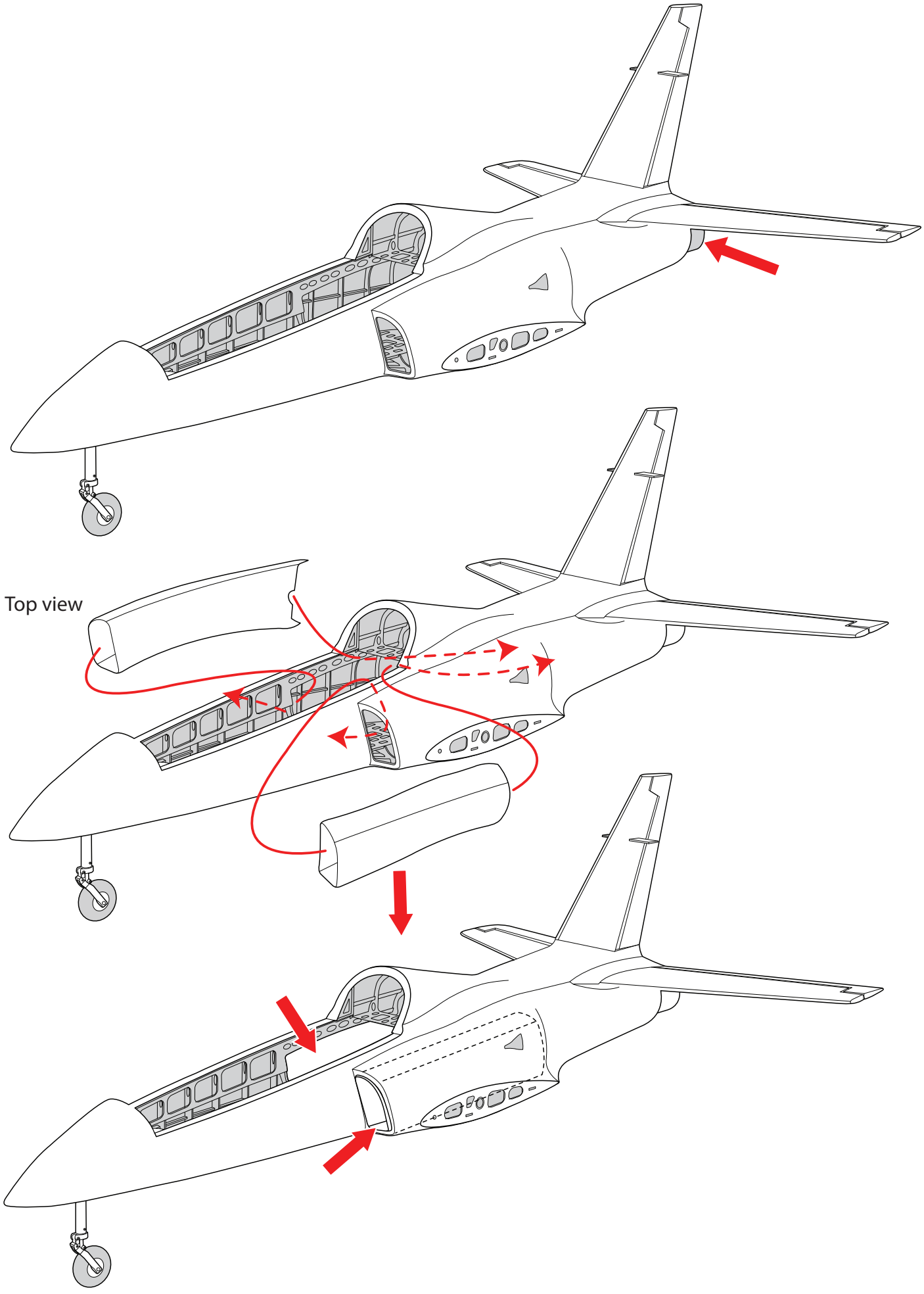
Top view

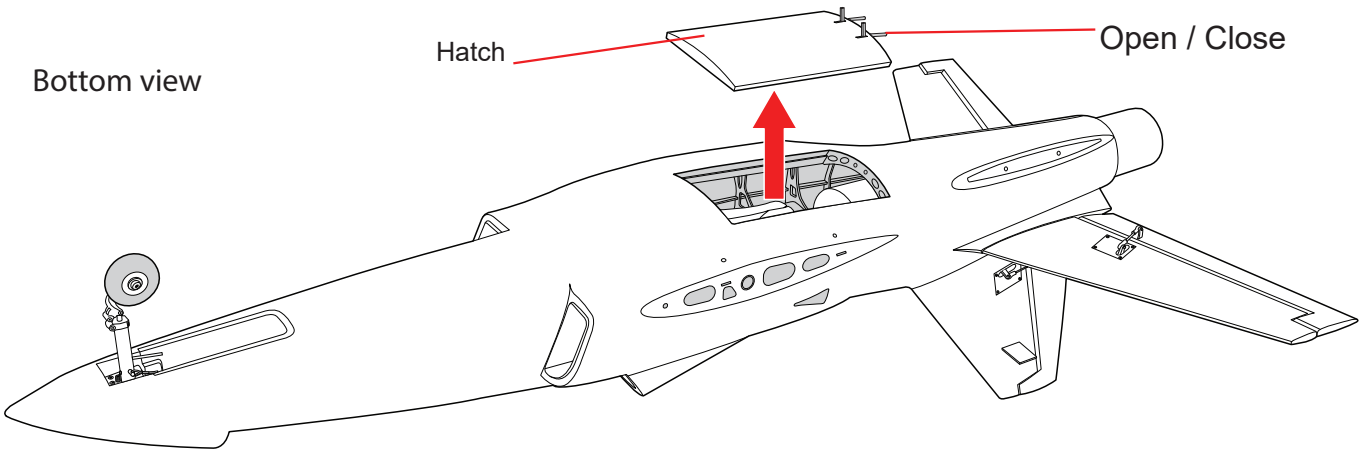

3x15mm Tp Screw - - - - - - - - - 4

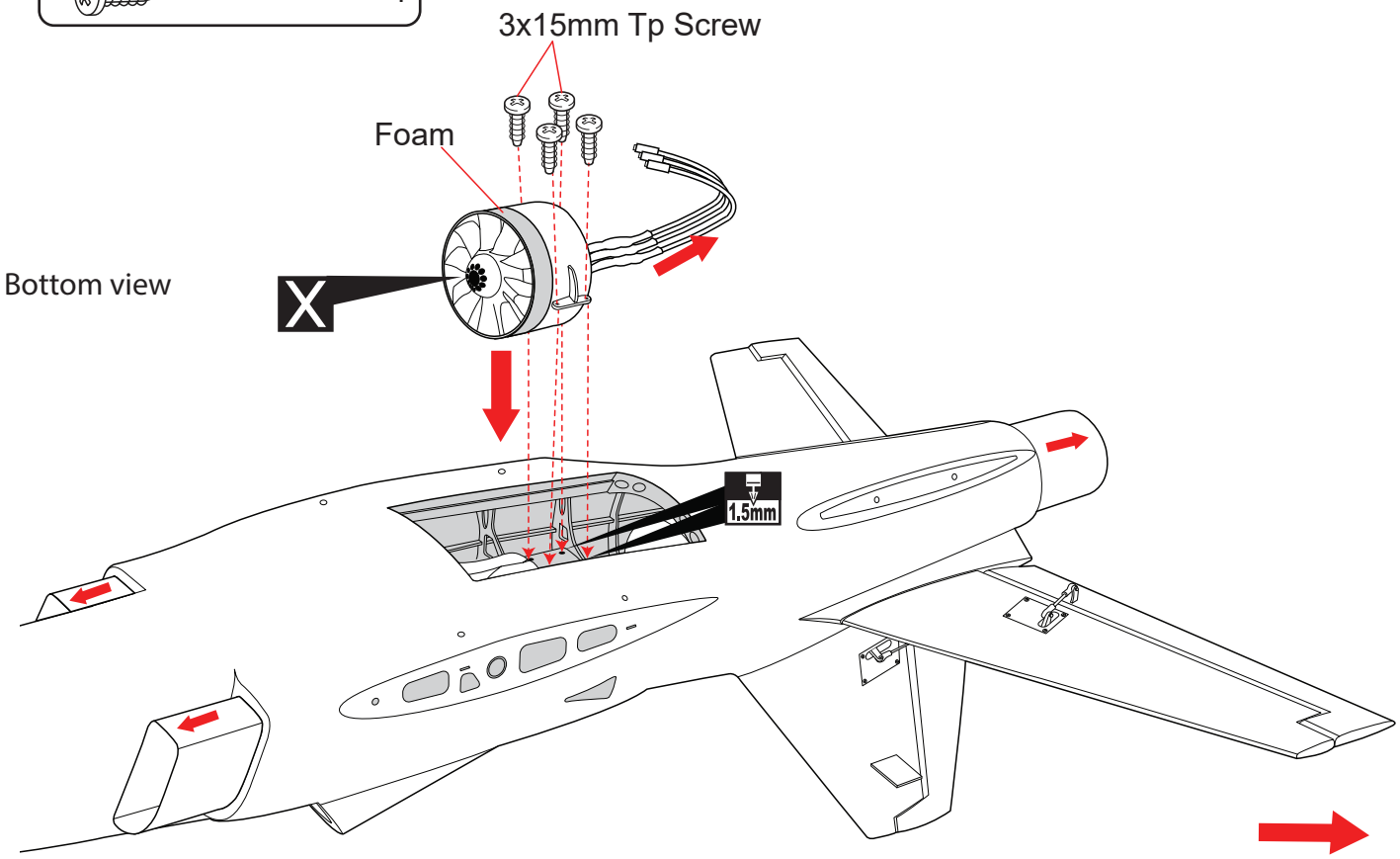

X Must be purchased separately!

1.5mm Drill holes using the stated. (in this case 1.5mm Ø).

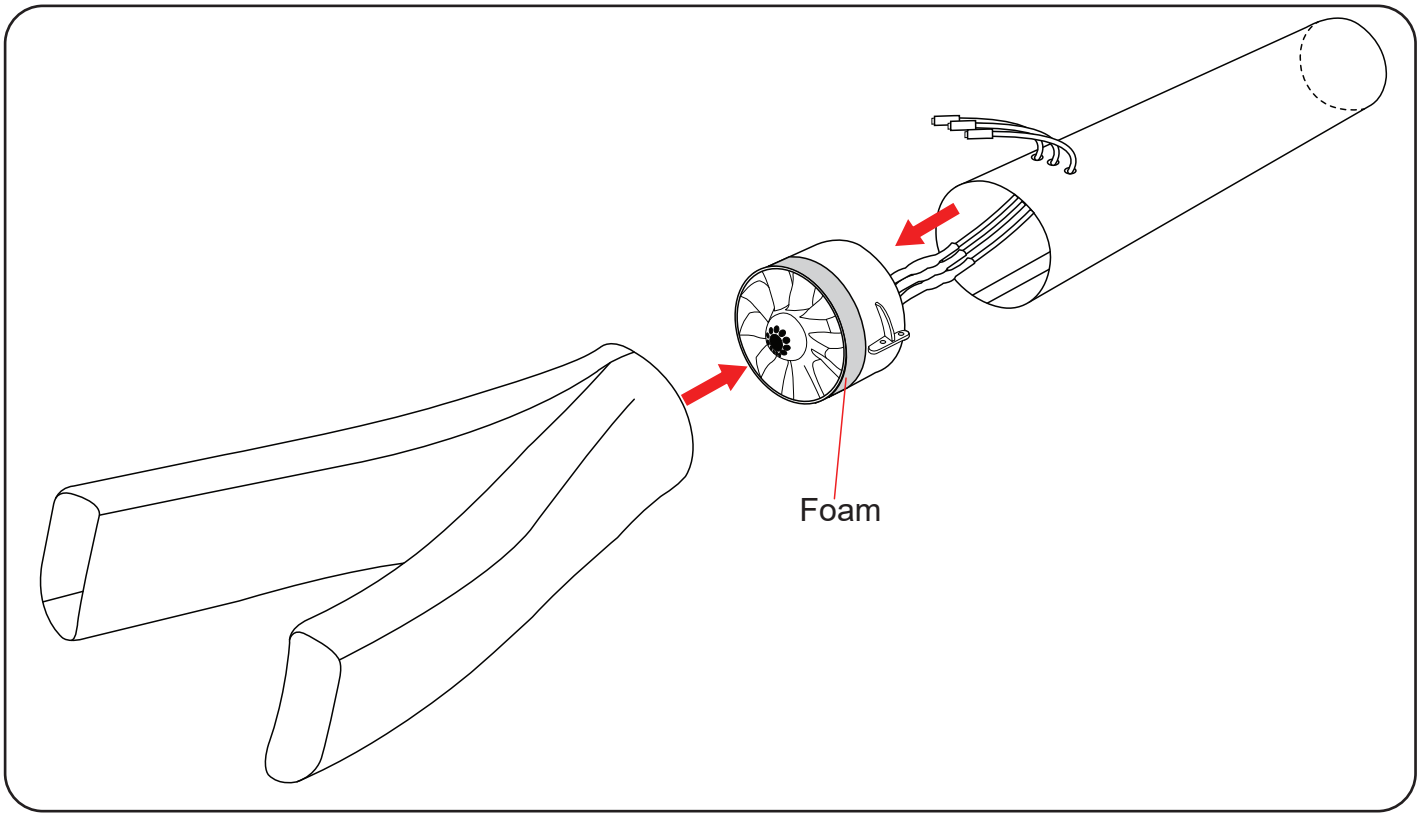
Foam

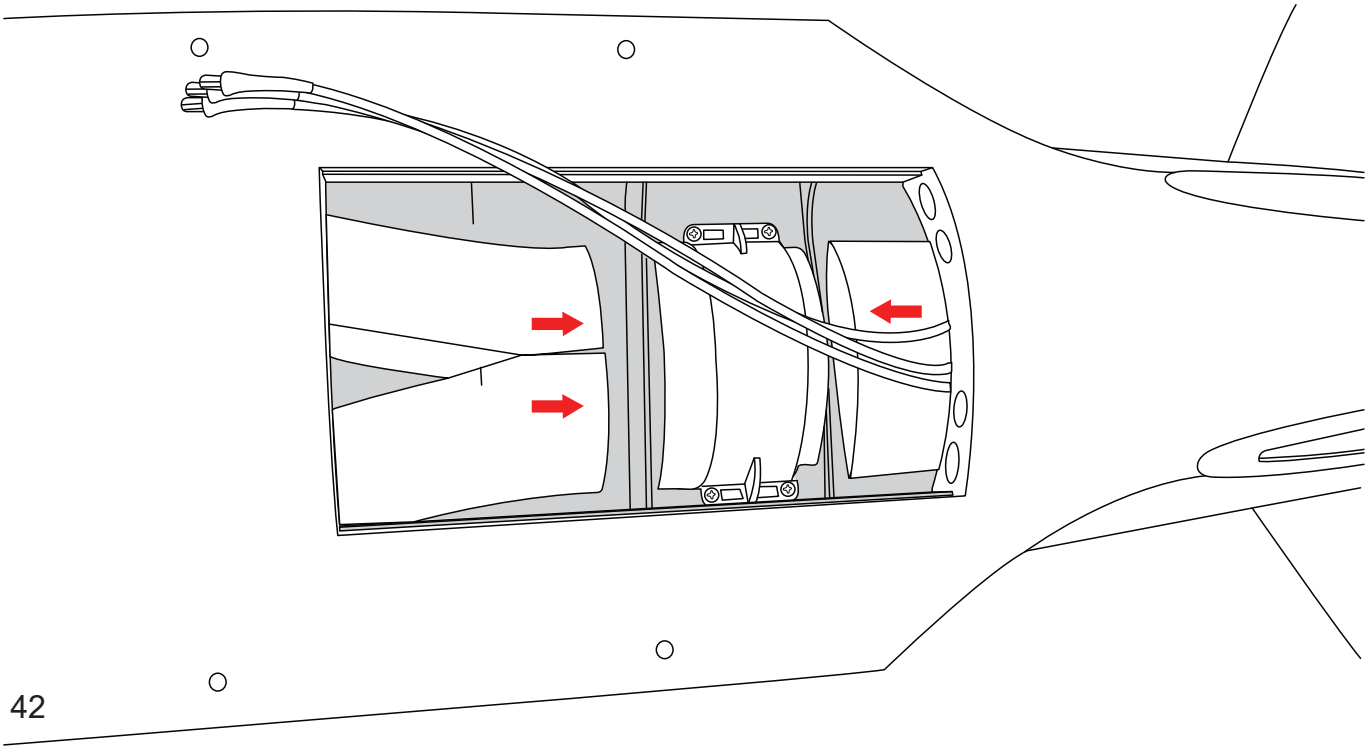

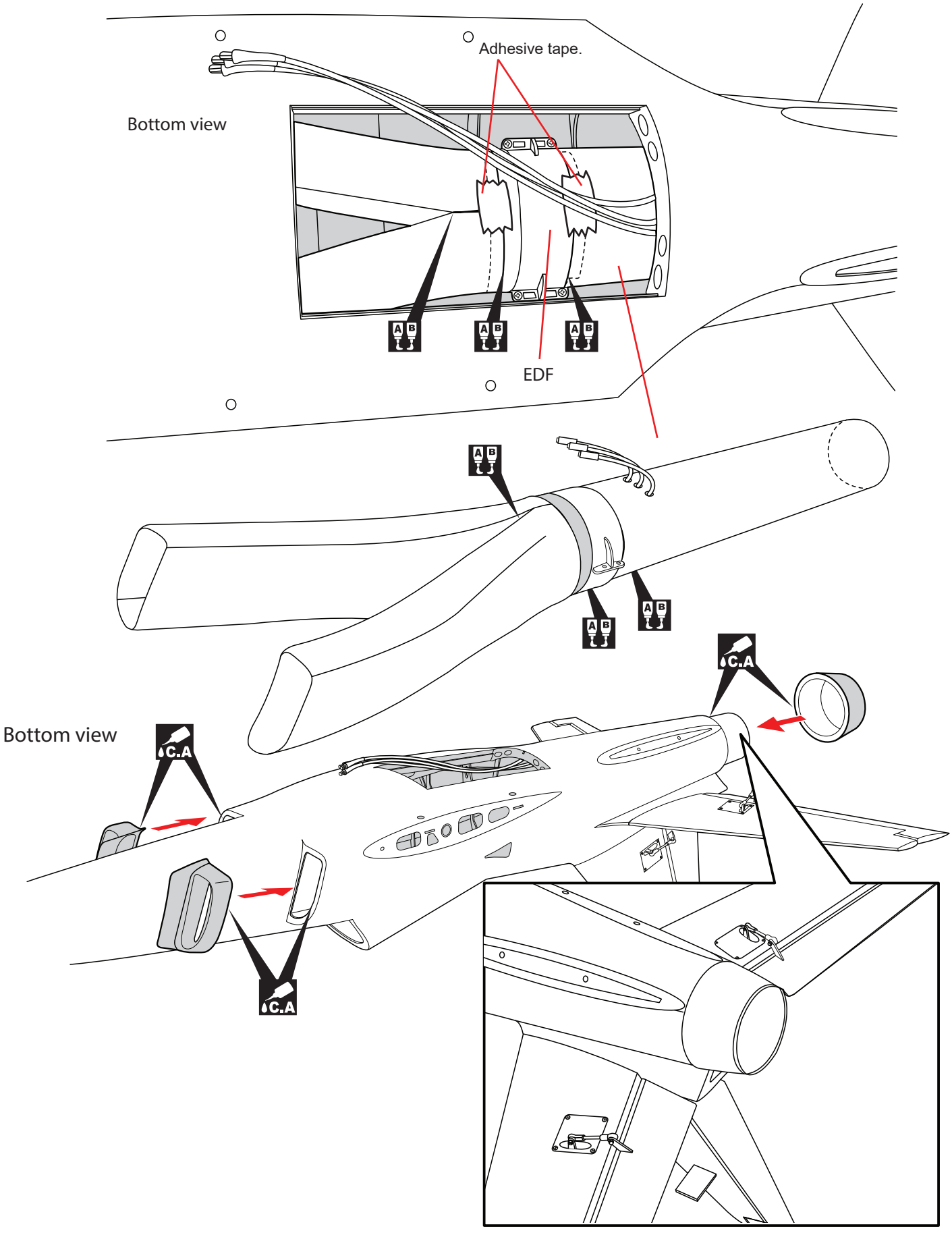

Apply epoxy glue.

Apply instant glue (C.A glue, super glue).

Bottom view

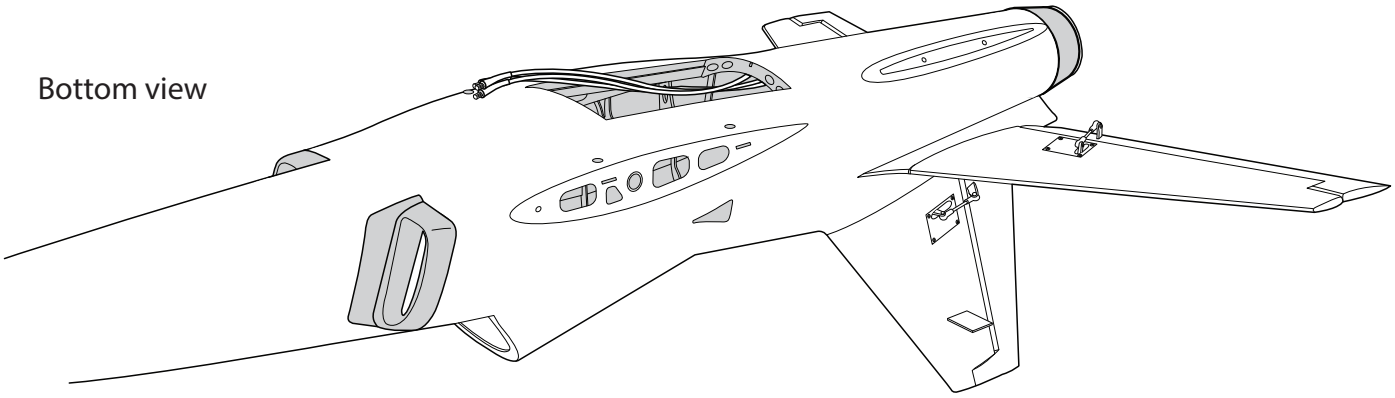

Ply Wood part for the rear bottom fuselage

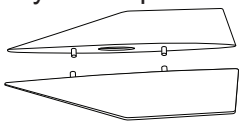

---------- 2

Bottom view

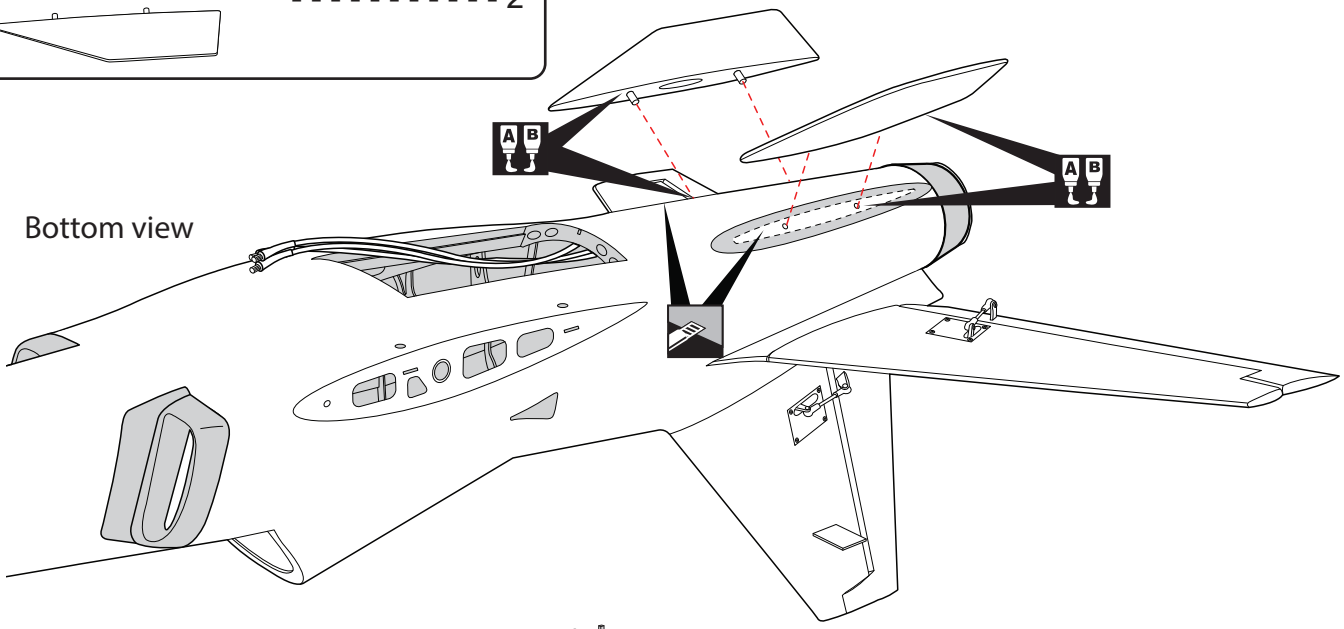

Bottom view

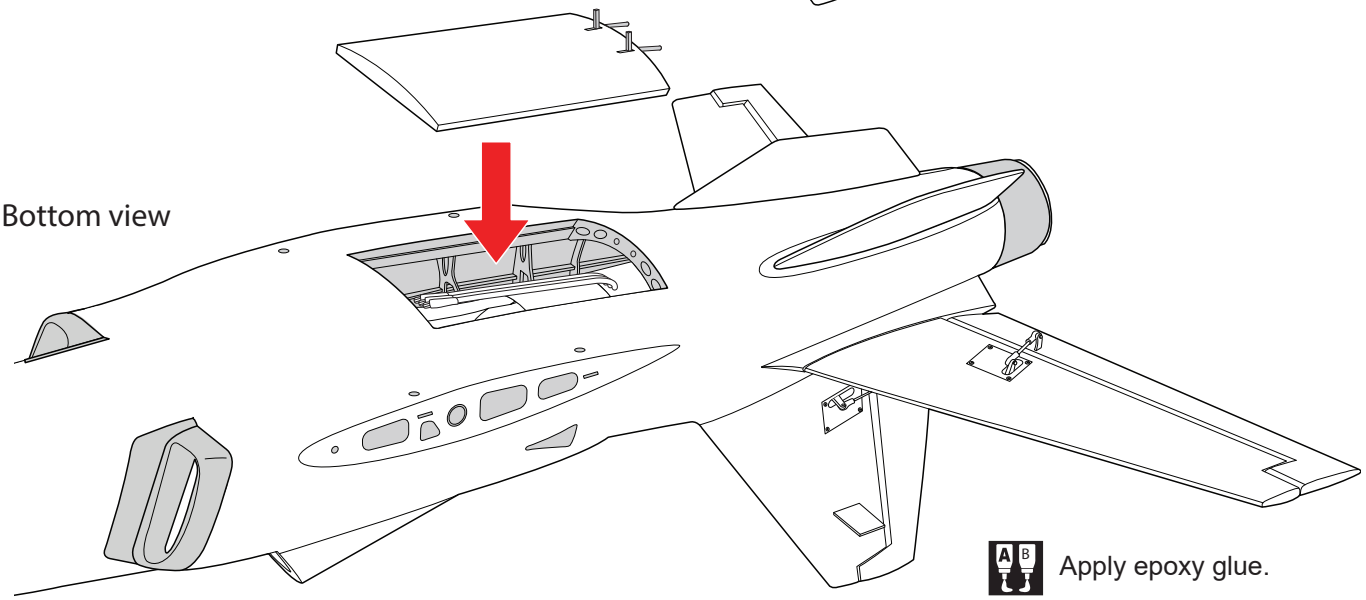

Apply epoxy glue.



Cut off shaded portion carefully.

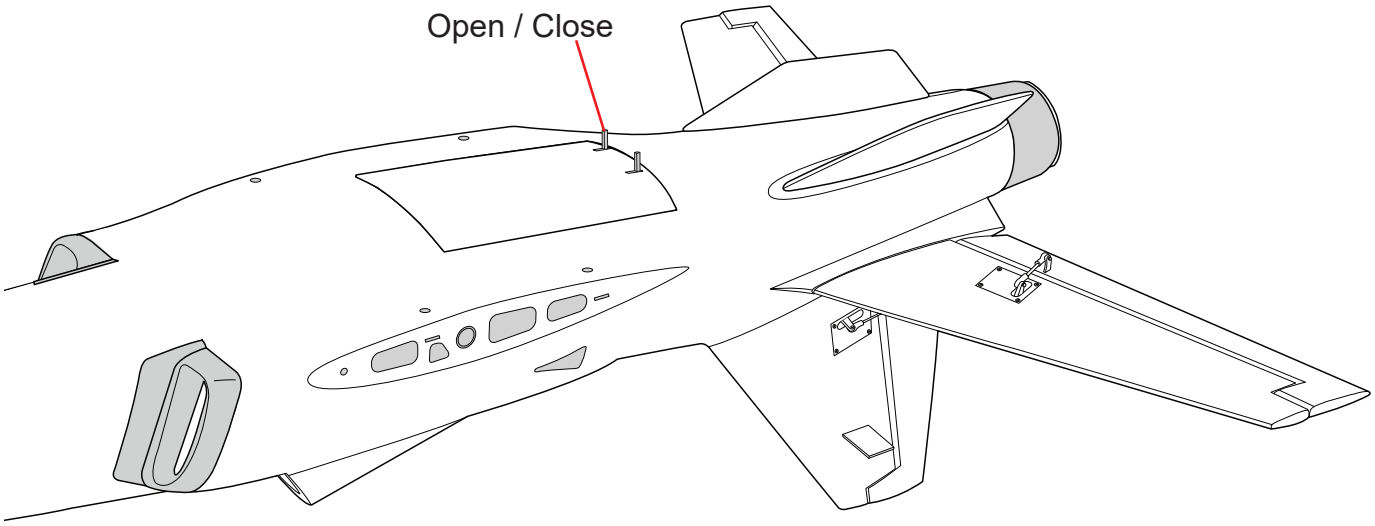

SECURE THE WING TO THE FUSELAGE

Attach the wings to the fuselage and secure the wing panels.

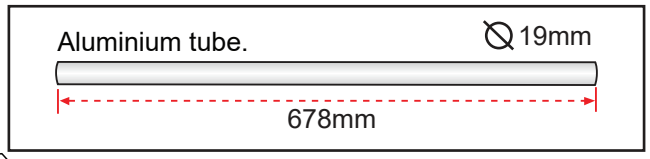

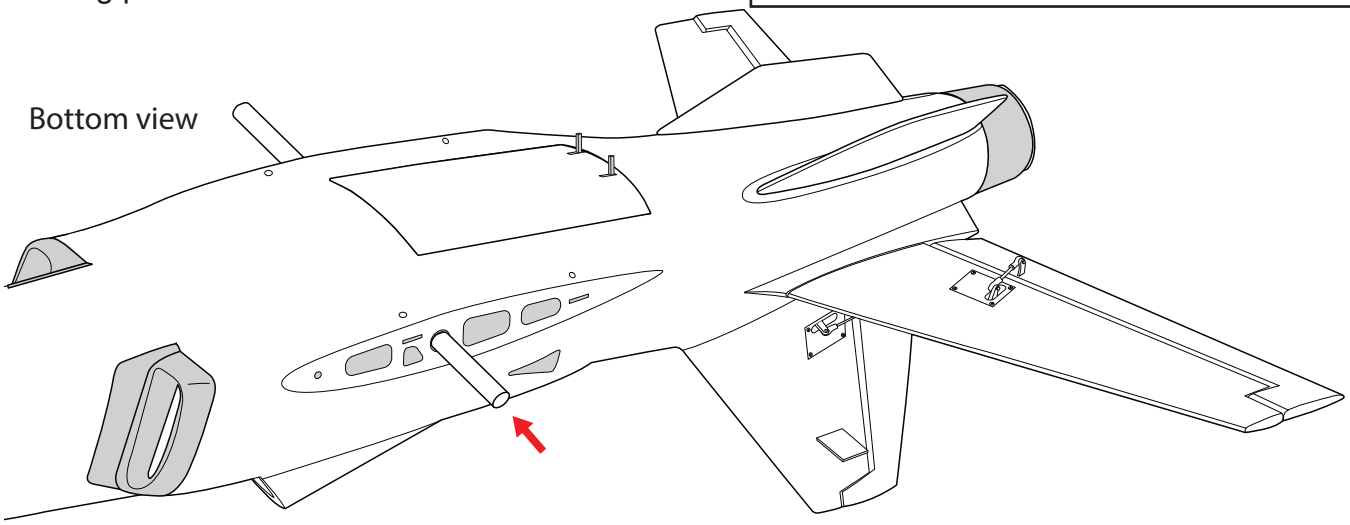

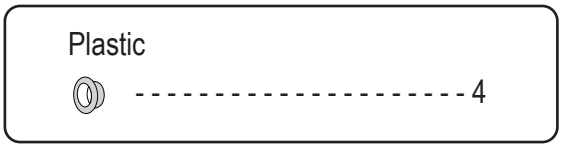

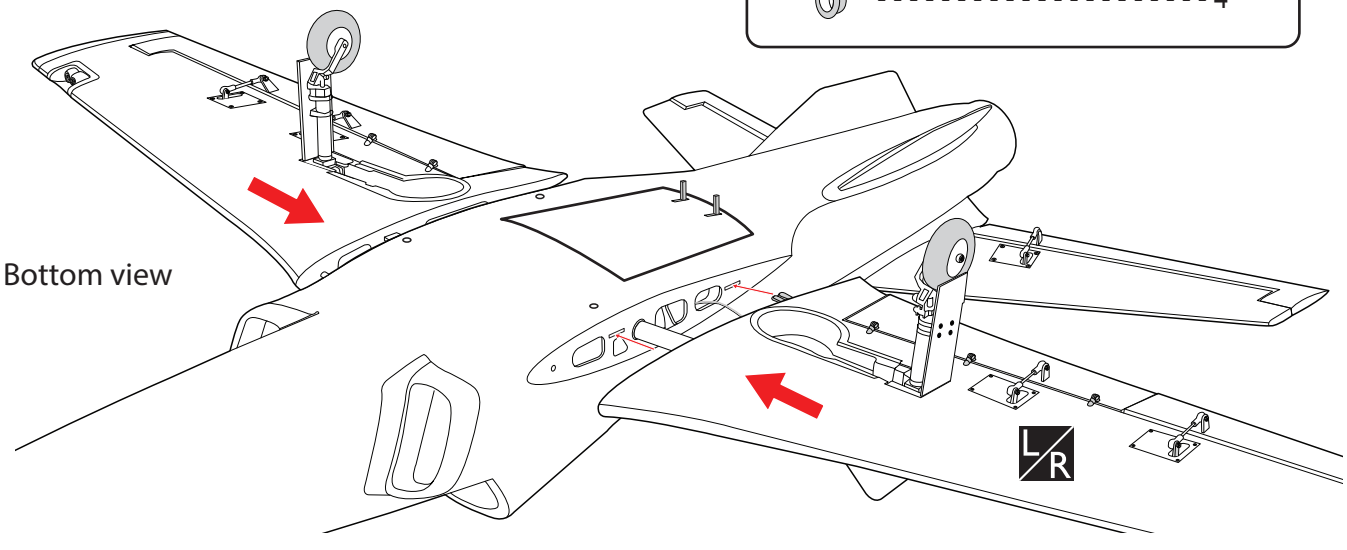

L/R Assemble left and right sides the same way.

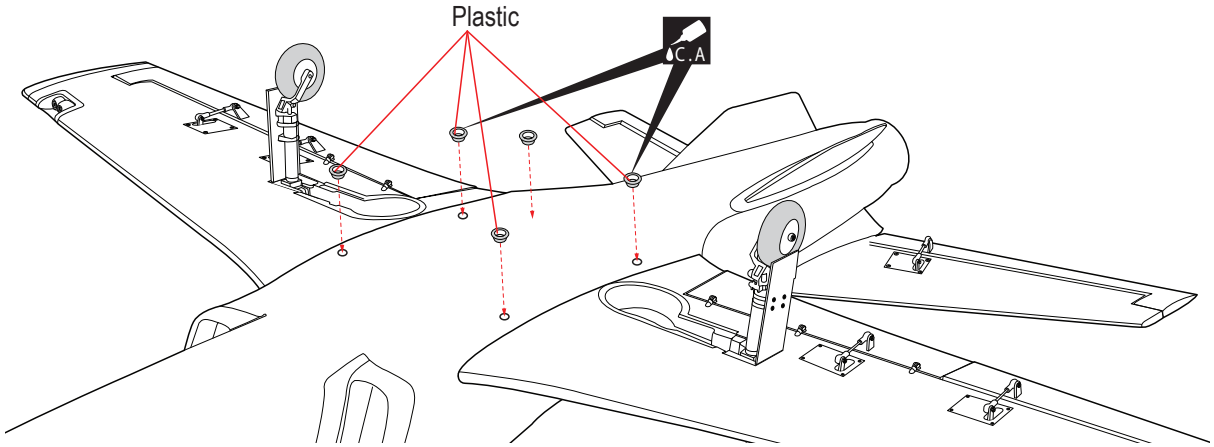

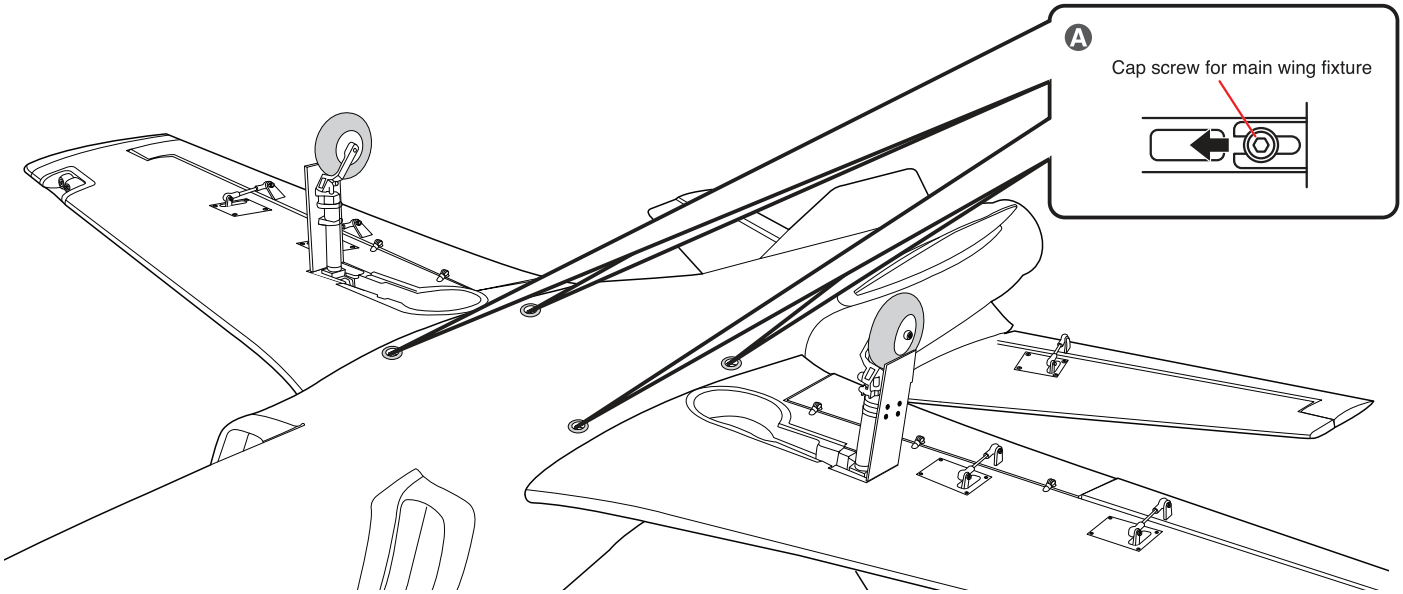

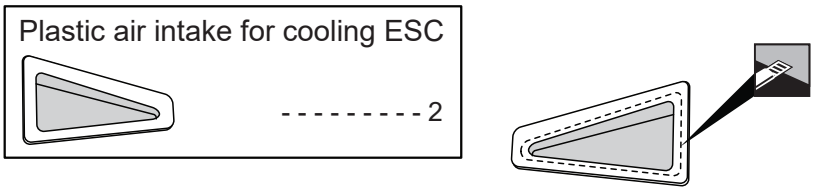

C.A Apply instant glue (C.A glue, super glue).

L/R Assemble left and right sides the same way.

A Main wing must be inserted and attached completely before fixing with screw.

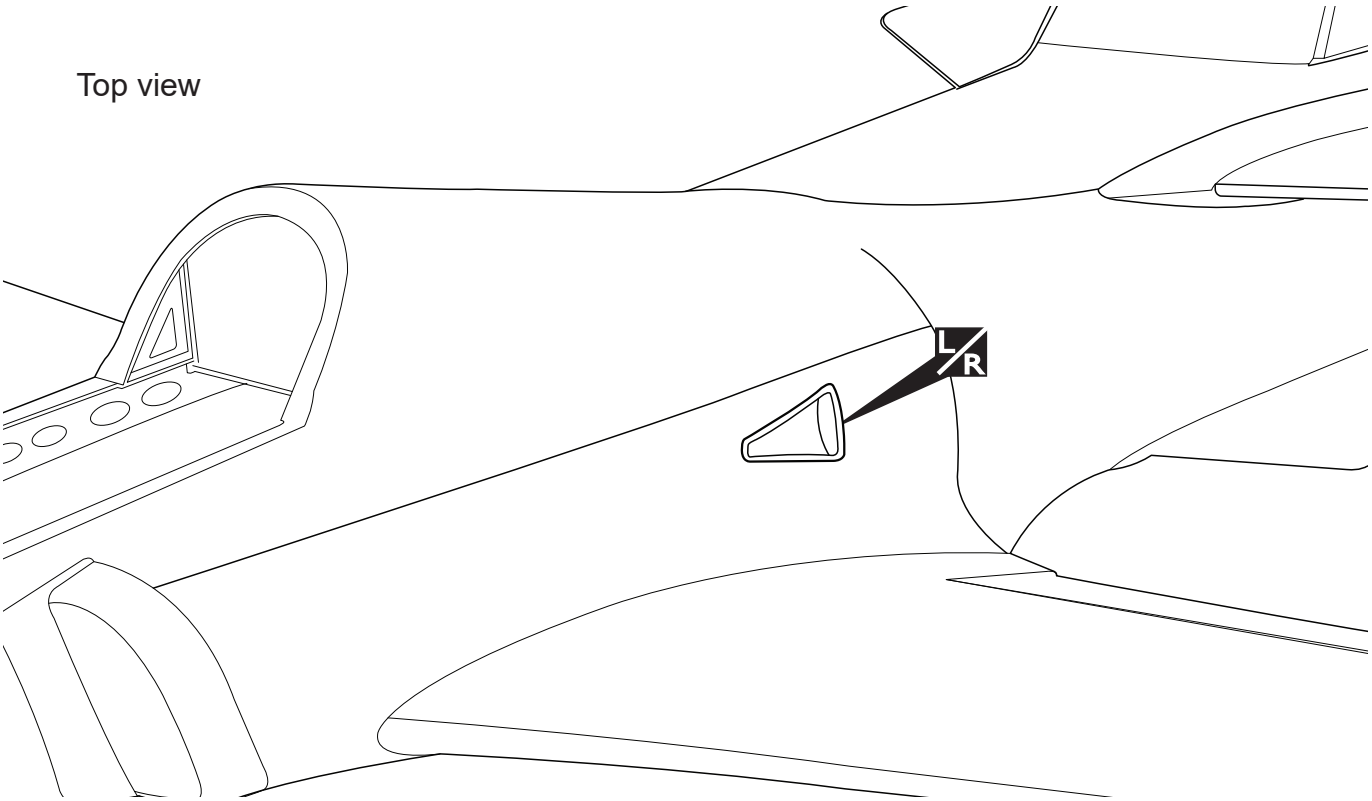

INSTALLING THE RECEIVER AND BATTERY

1. Plug the servo leads and the switch lead into the receiver. You may want to plug an aileron extension into the receiver to make plugging in the aileron servo lead easier when you are installing the wing. Plug the battery pack lead into the switch.

2. Wrap the receiver and battery pack in the protective foam to protect them from vibration. Use a rubber band or masking tape to hold the foam in place.

Do not permanently secure the receiver and battery until after balancing the model.

INSTALLING THE SWITCH

1. The switch should be mounted on the fuselage side, opposite the muffler, close enough to the receiver so the lead will reach. Use the face plate of the switch cut out and locate the mounting holes.

2. Cut out the switch hole using a modeling knife. Use a 2mm drill bit and drill out the two mounting holes through the fuselage side.

3. Secure the switch in place using the two machine screws provided with the radio system.

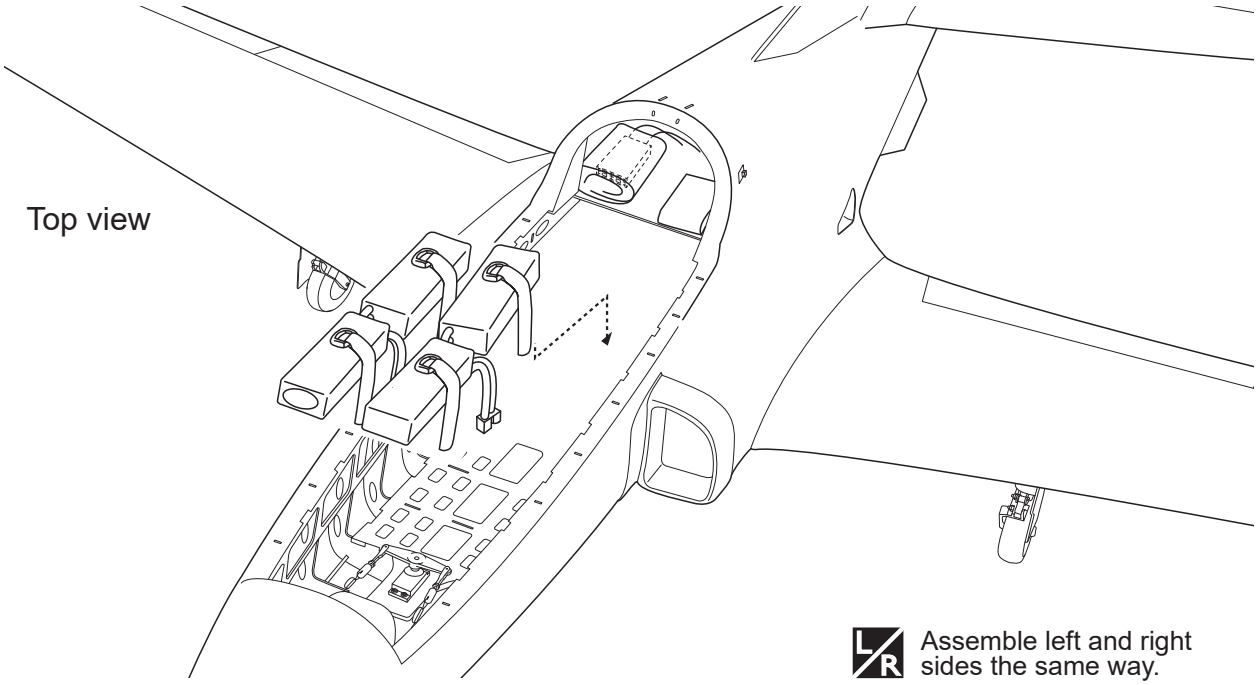

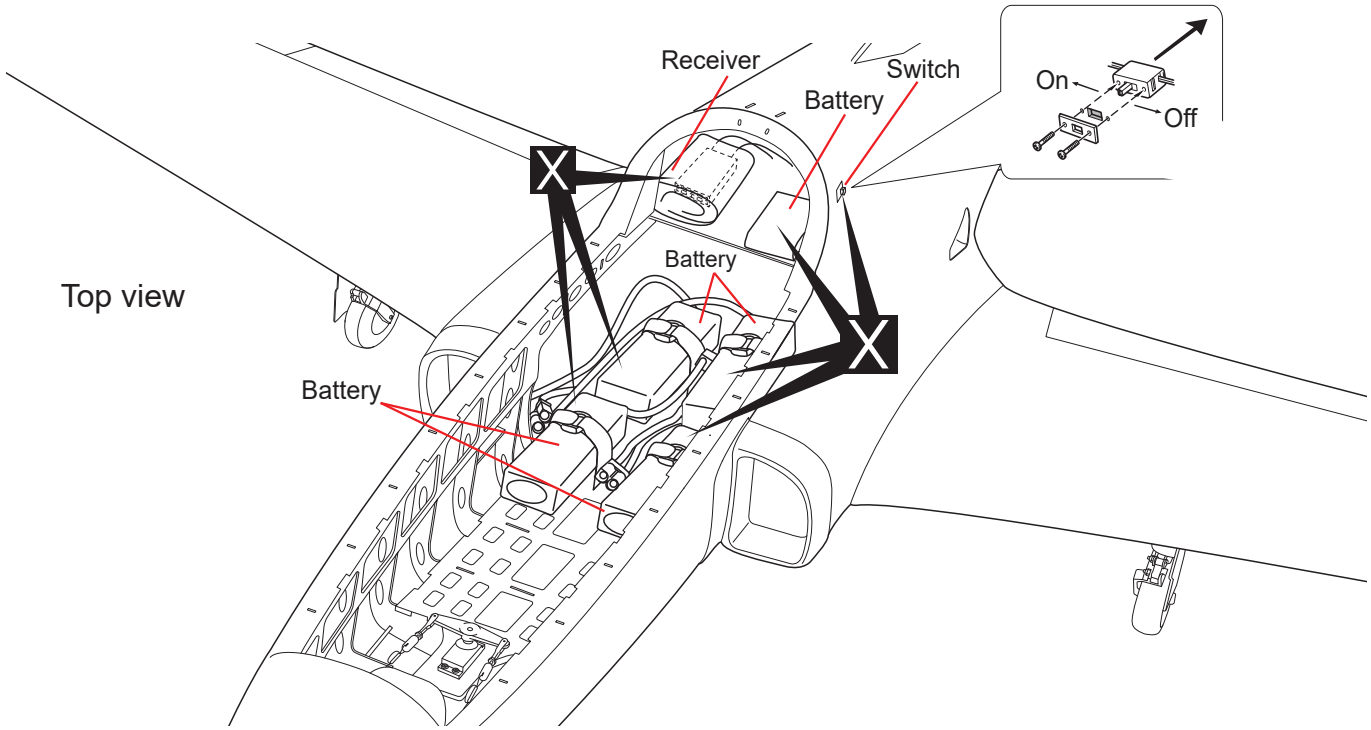

INSTALLING COCKPIT FUSELAGE

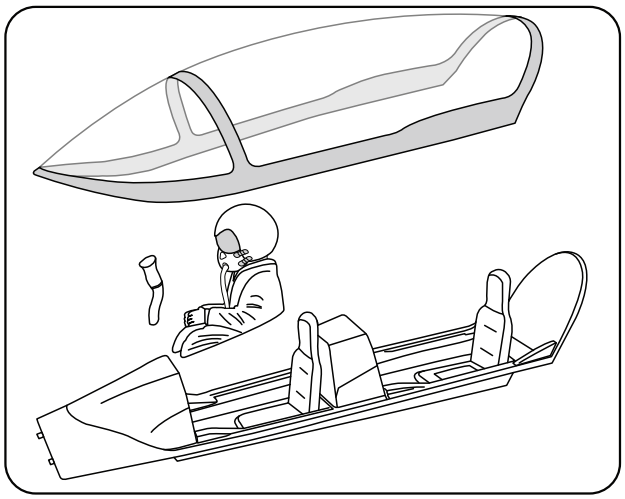

Position the canopy so the rear frame on the canopy is aligned with the rear edge of the cockpit opening. Use canopy glue to secure the canopy to the canopy hatch. Use low-tack tape to hold the canopy in position until the glue fully cures. Wrap the tape completely around the canopy hatch.

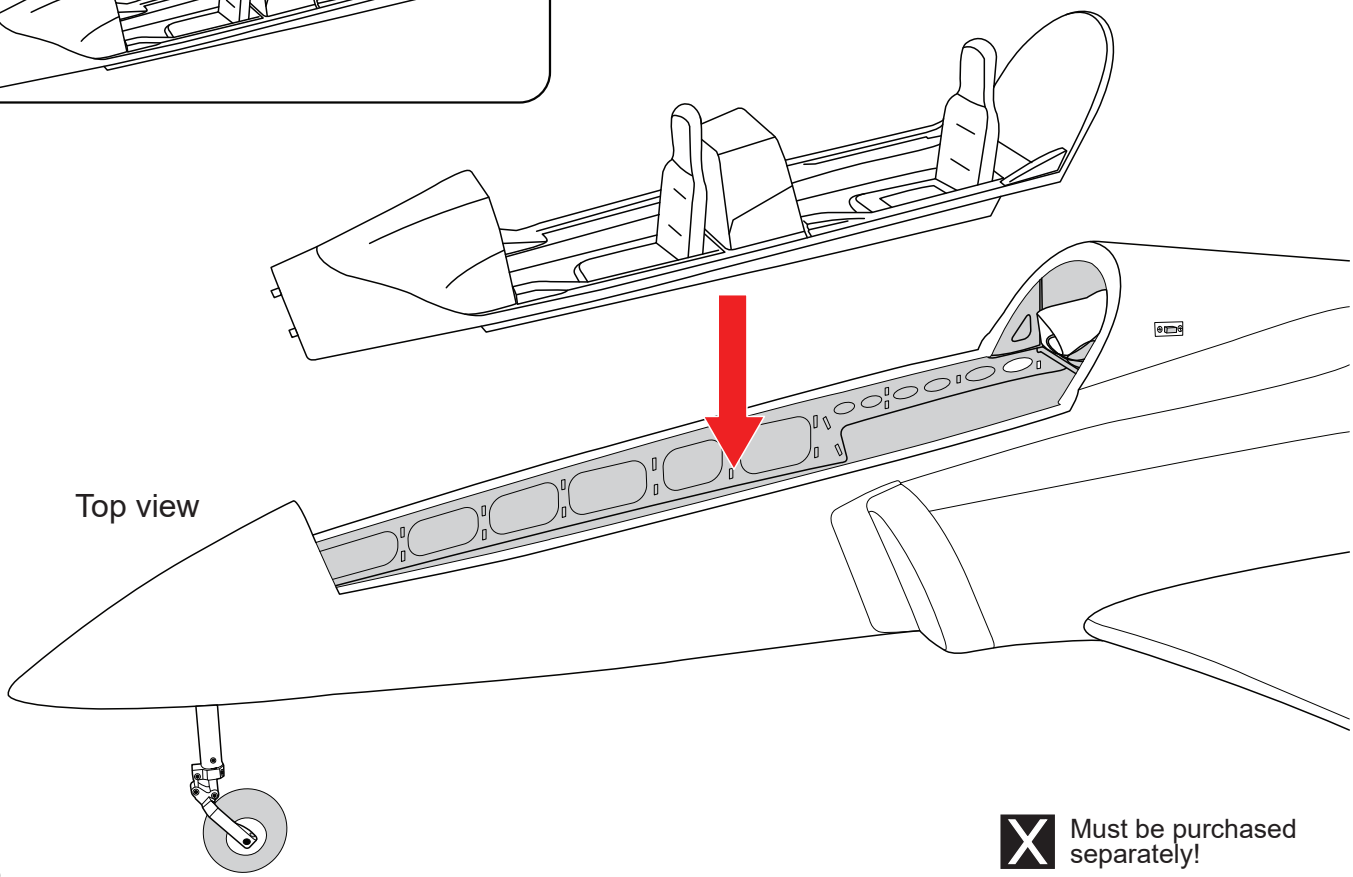

X Must be purchased separately!

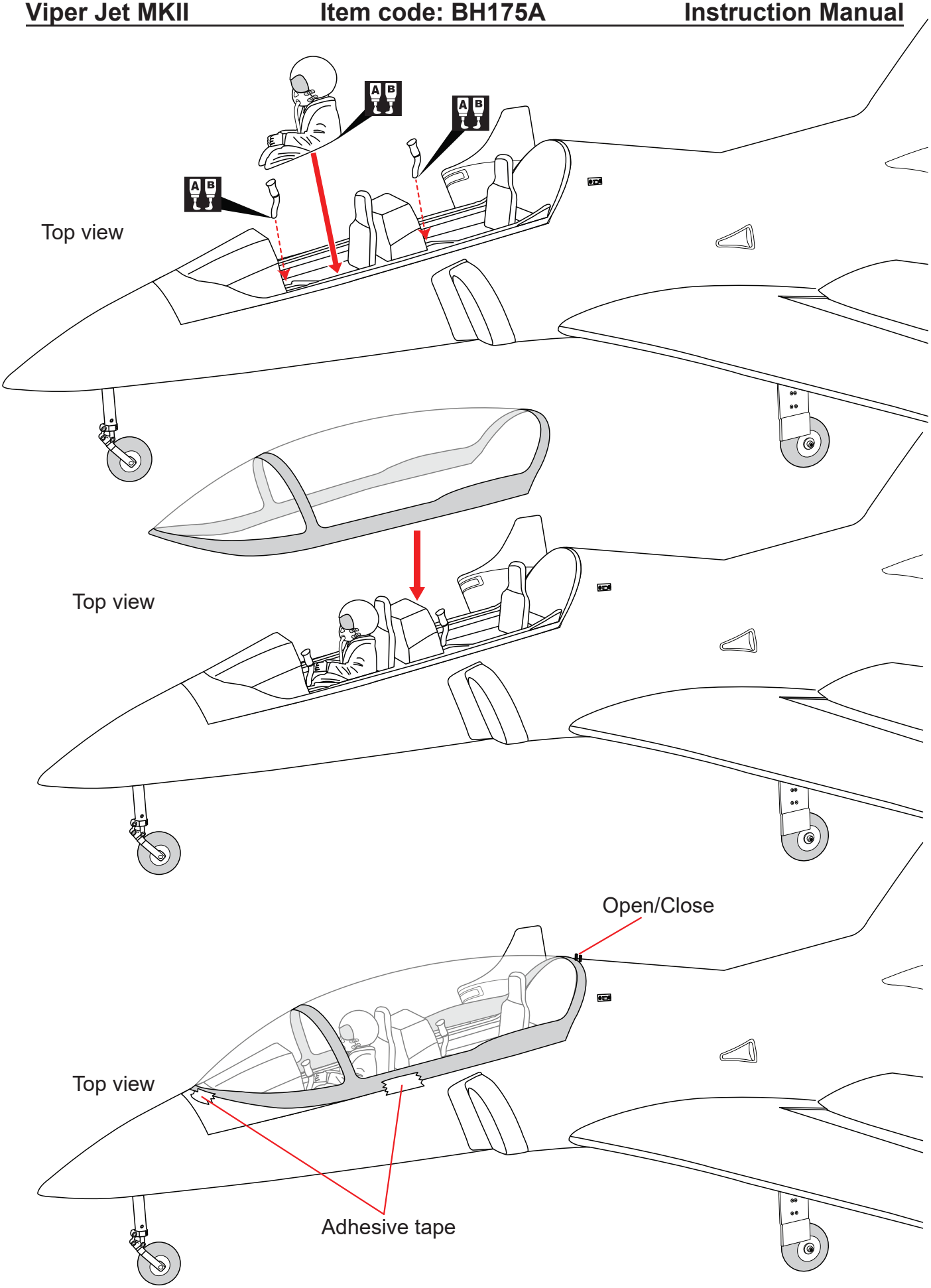

Apply epoxy glue.

BALANCING

1. It is critical that your airplane be balanced correctly. Improper balance will cause your plane to lose control and crash.

   THE CENTER OF GRAVITY IS LOCATED 160-165mm (6.3-6.5 in) BACK FROM THE LEADING EDGE OF THE WING, AT THE FUSELAGE. BALANCE A PLANE UPSIDE DOWN WITH THE FUEL TANK EMPTY.

2. If the nose of the plane falls, the plane is nose heavy. To correct this first move the battery pack further back in the fuselage. If this is not possible or does not correct it, stick small amounts of lead weight on the fuselage under the horizontal stabilizer. If the tail of the plane falls, the plane is tail heavy. To correct this, move the battery and receiver forward or if this is not possible, stick weight into the firewall. When balanced correctly, the airplane should sit level or slightly nose down when you lift it up with your fingers.

LATERAL BALANCE

After you have balanced a plane on the C.G. You should laterally balance it. Doing this will help the airplane track straighter.

1. Turn the airplane upside down. Attach one loop of heavy string to the engine crankshaft and one to the tail wheel wire. With the wings level, carefully lift the airplane by the string. This may require two people to make it easier.

2. If one side of the wing fall, that side is heavier than the opposite. Add small amounts of lead weight to the bottom side of the lighter wing half's wing tip. Follow this procedure until the wing stays level when you lift the airplane.

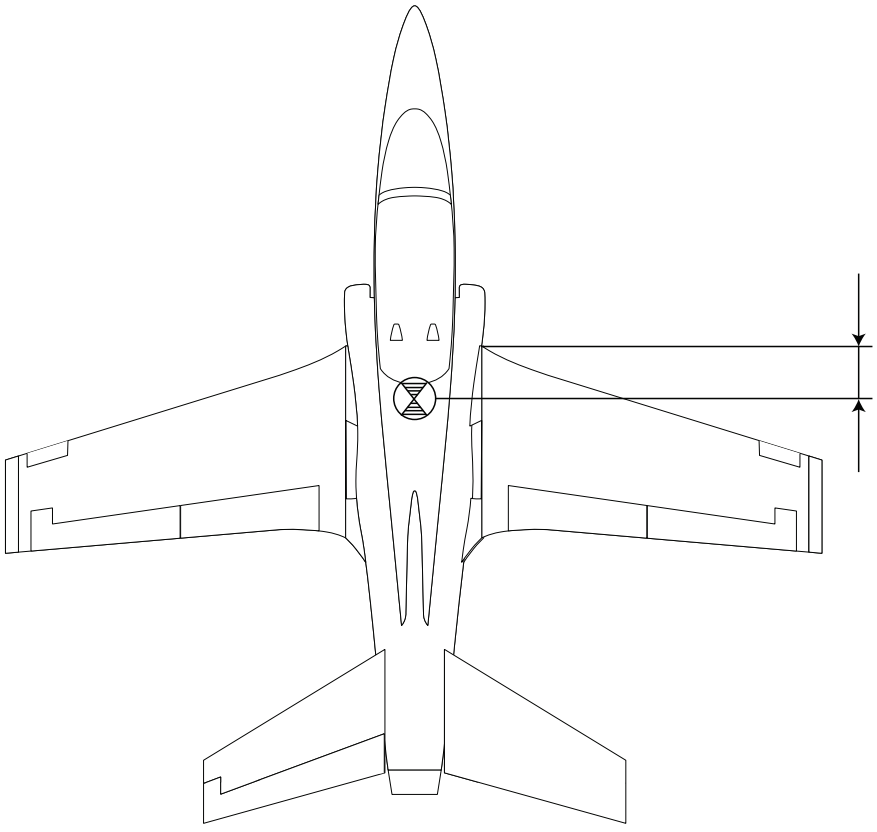

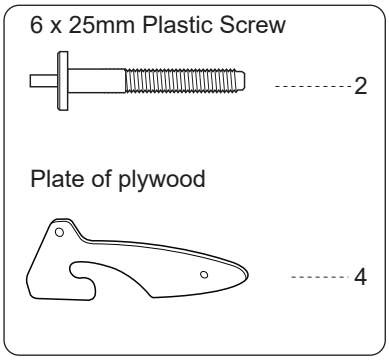

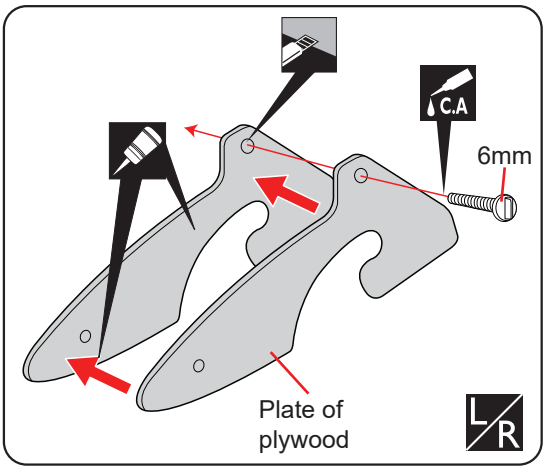

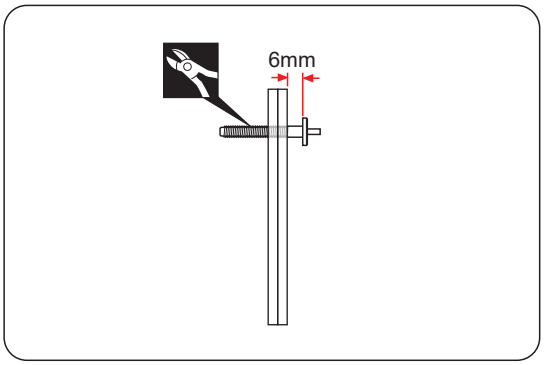

Cut off excess.

Cut off shaded portion carefully.

Apply instant glue (C.A glue, super glue).

Assemble left and right sides the same way.

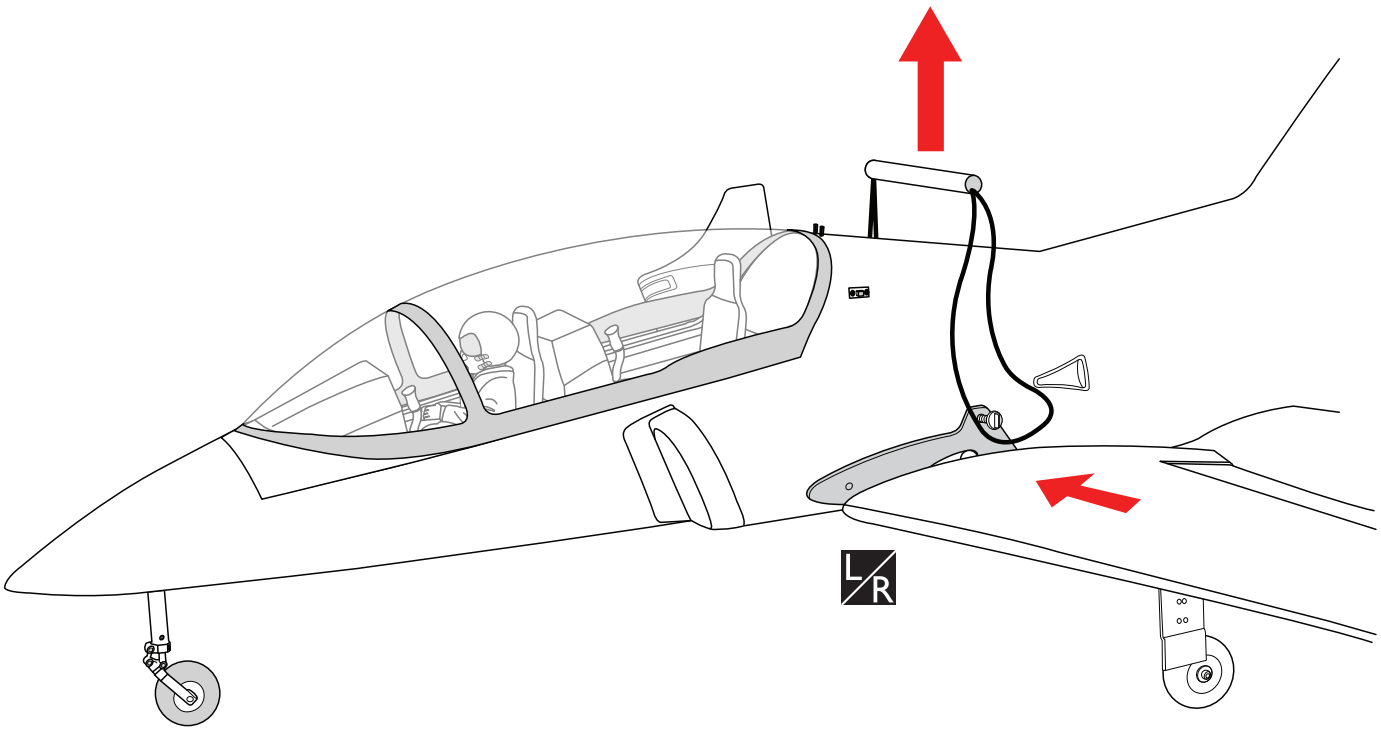

- ▶ In order to obtain the CG specified, reposition the receiver and other equipment.
- ▶ If not obtain the CG specified, add a weight and adjust.

Warning!

► Do not fly before confirming the correct location of the CG. If the CG is incorrect, you lose control of your airplane which leads to accidents.

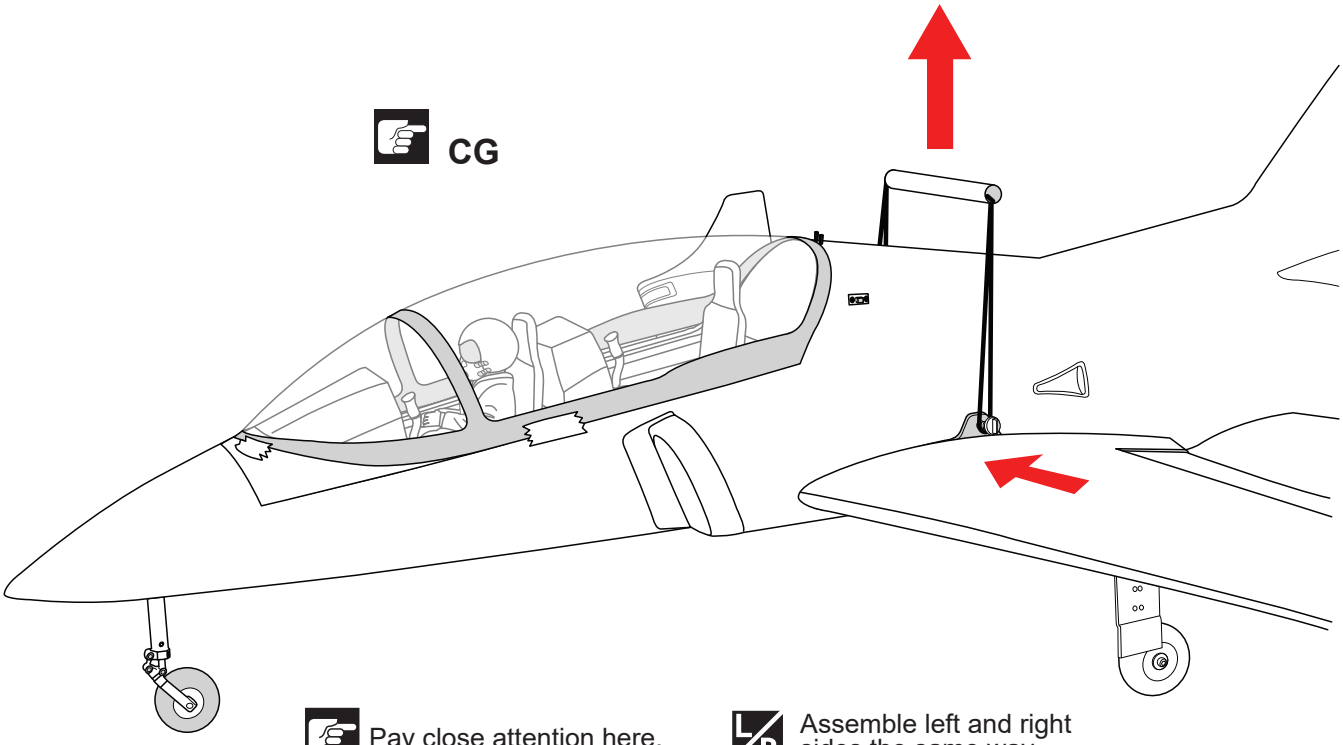

Pay close attention here.

L/R Assemble left and right sides the same way.

CONTROL THROWS

1. We highly recommend setting up a plane using the control throws listed.
2. The control throws should be measured at the widest point of each control surface.
3. Check to be sure the control surfaces move in the correct directions.

- **LOW RATE**

Ailerons	: 12 mm up	12 mm down
Elevator	: 10 mm up	10 mm down
Rudder	: 35 mm right	35 mm left
Flap	: 25 mm	

- **HIGH RATE**

Ailerons	: 15 mm up	15 mm down
Elevator	: 14 mm up	14 mm down
Rudder	: 50 mm right	50 mm left
Flap	: 40 mm	

FLIGHT PREPARATION PRE FLIGHT CHECK

1. Completely charge your transmitter and receiver batteries before your first day of flying.
2. Check every bolt and every glue joint in your plane to ensure that everything is tight and well bonded.
3. Double check the balance of the airplane
4. Check the control surface
5. Check the receiver antenna . It should be fully extended and not coiled up inside the fuselage.

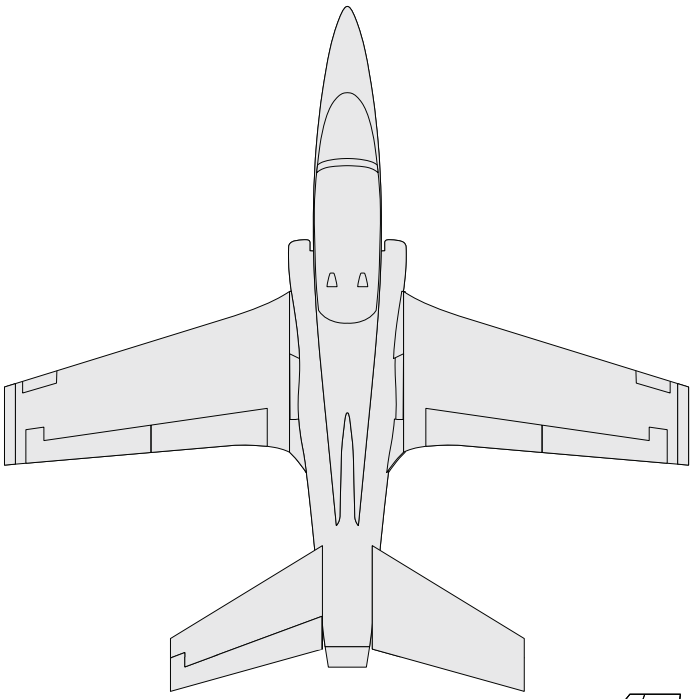

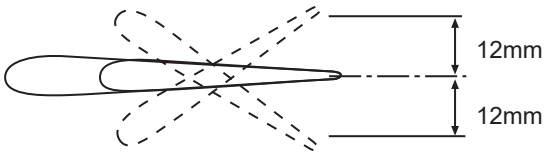

Aileron Control

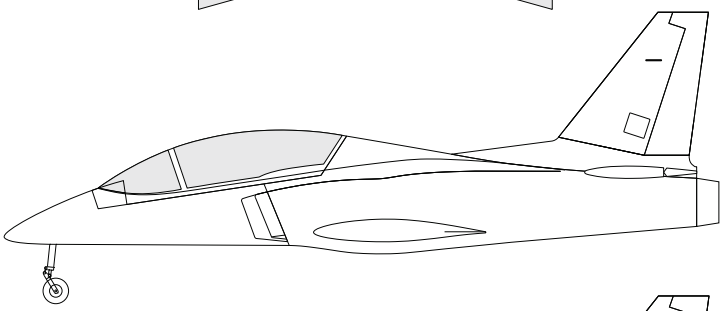

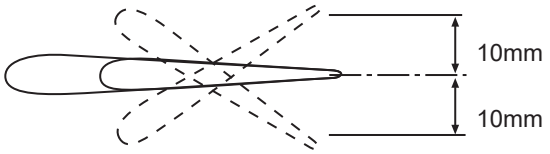

Elevator Control

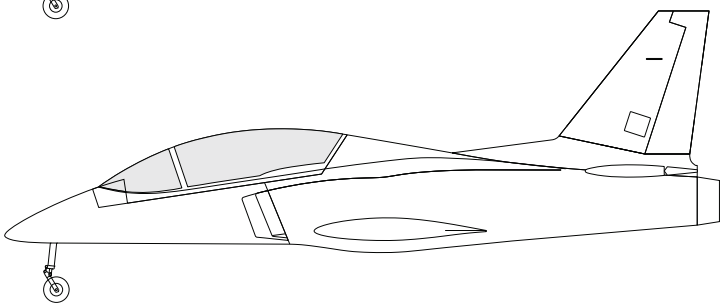

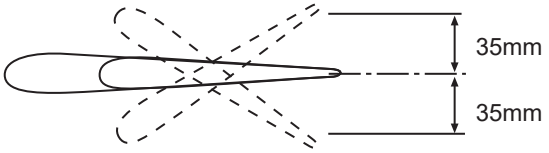

Rudder Control

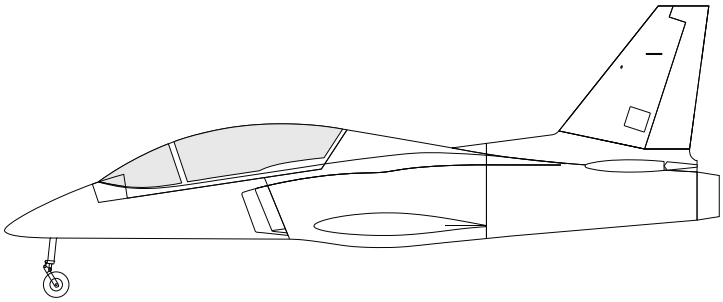

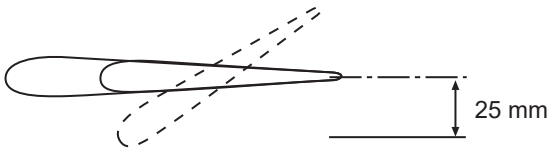

Flap Control

FOR YOUR RADIO INSTALLATION
BASIC CONNECTION FOR AIRPLANE AND ADJUSTMENT OF SERVOS

Example of connection

- For more information, refer to radio system instruction manual.
- Follow instruction manual of Engine and Battery.

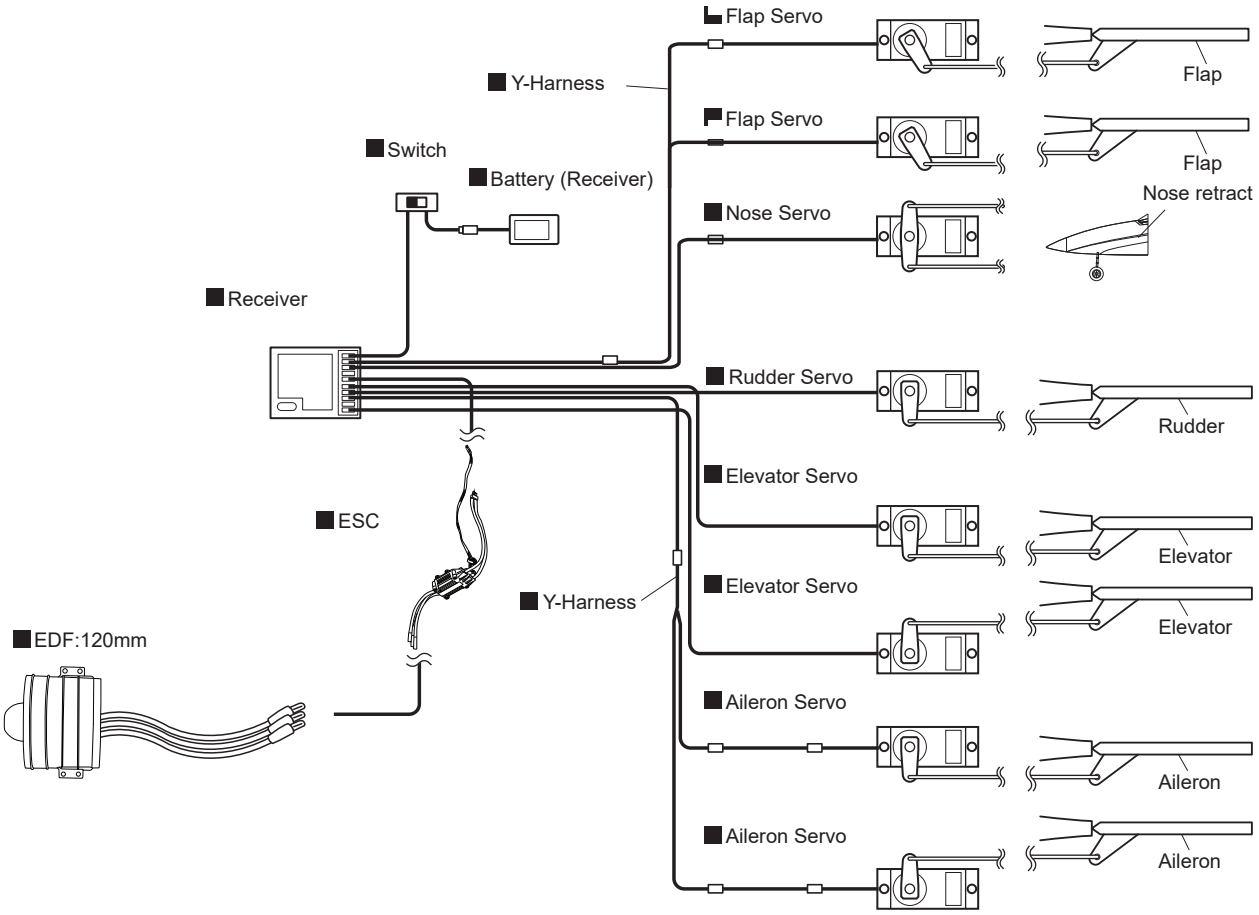

MAIN GEAR DIMENSIONAL DETAIL

MAIN GEAR STRUTS

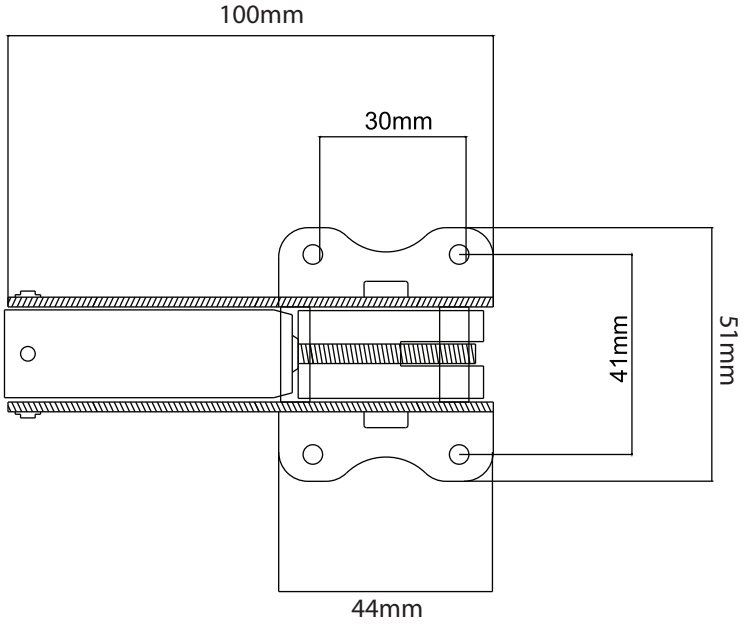

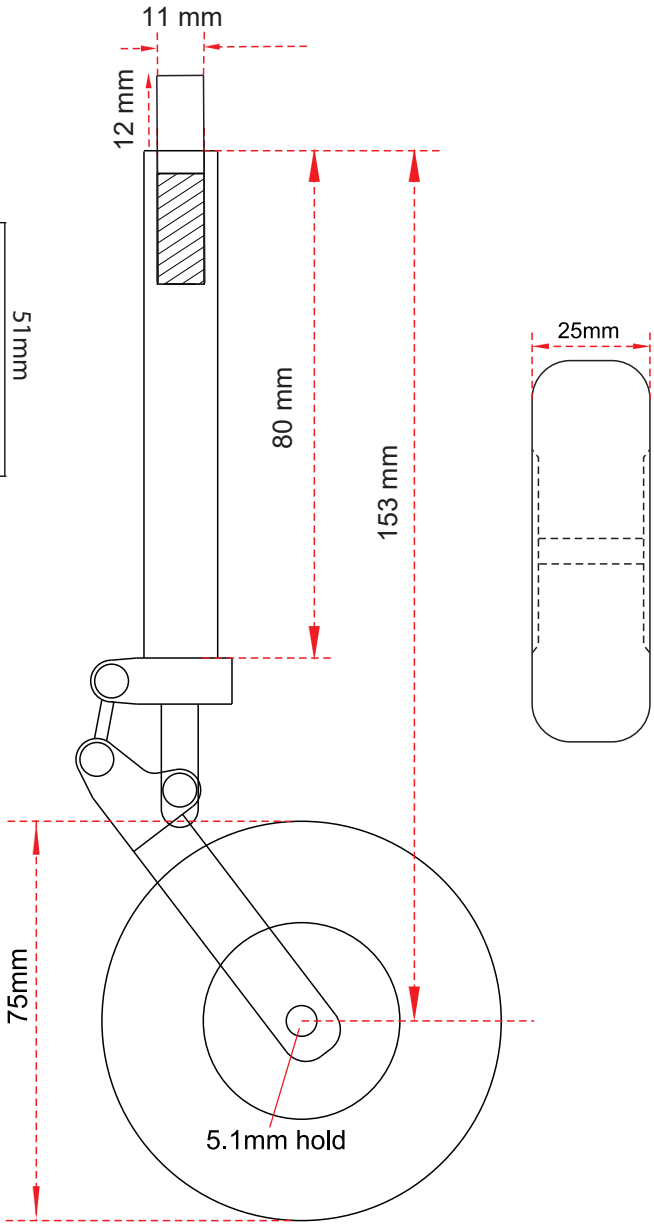

NOSE GEAR STRUTS

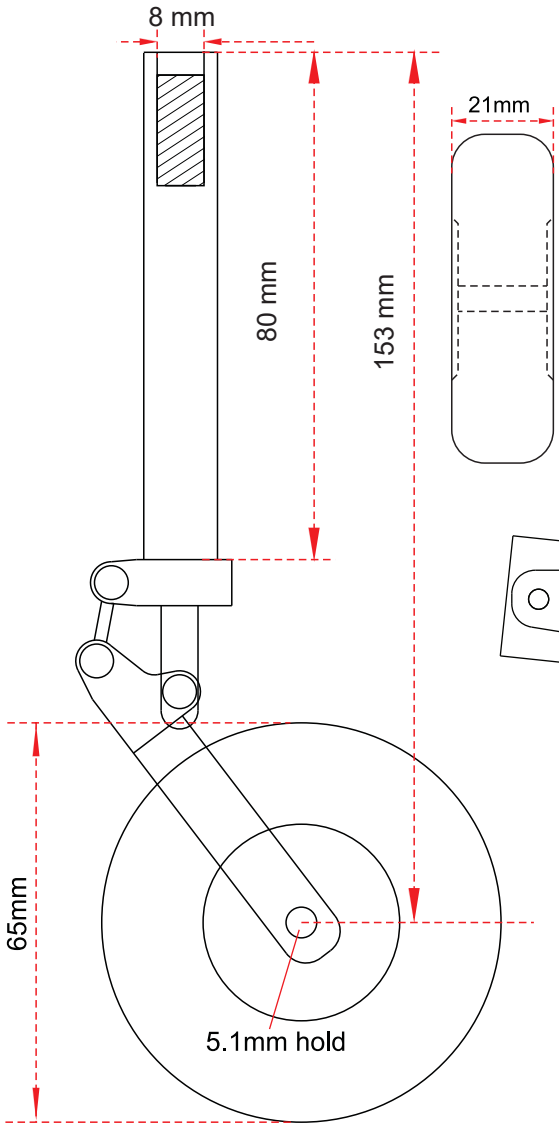

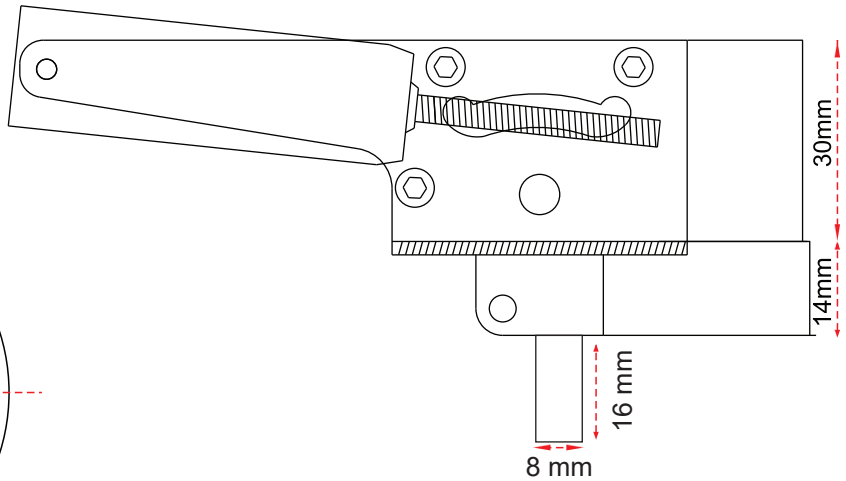

DECORATION

< Side view > Left

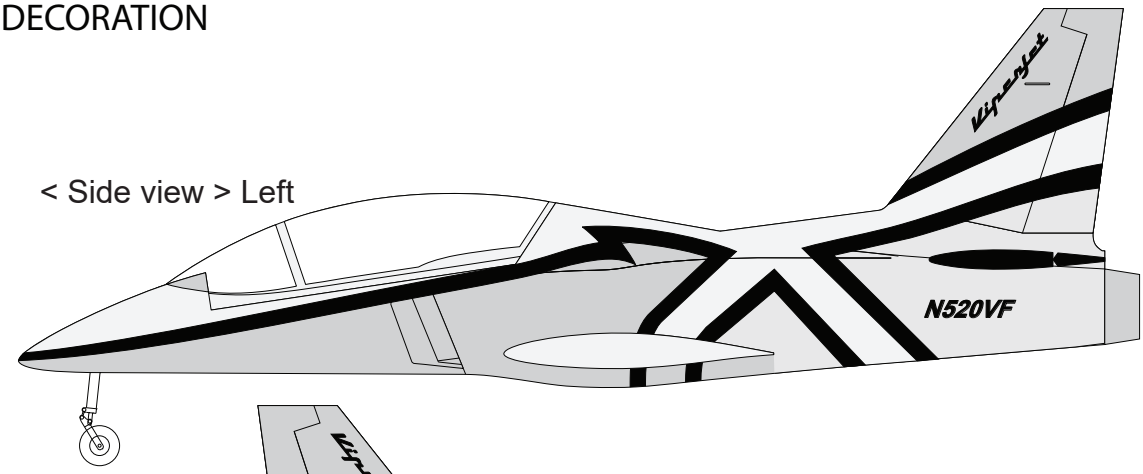

< Side view > Right

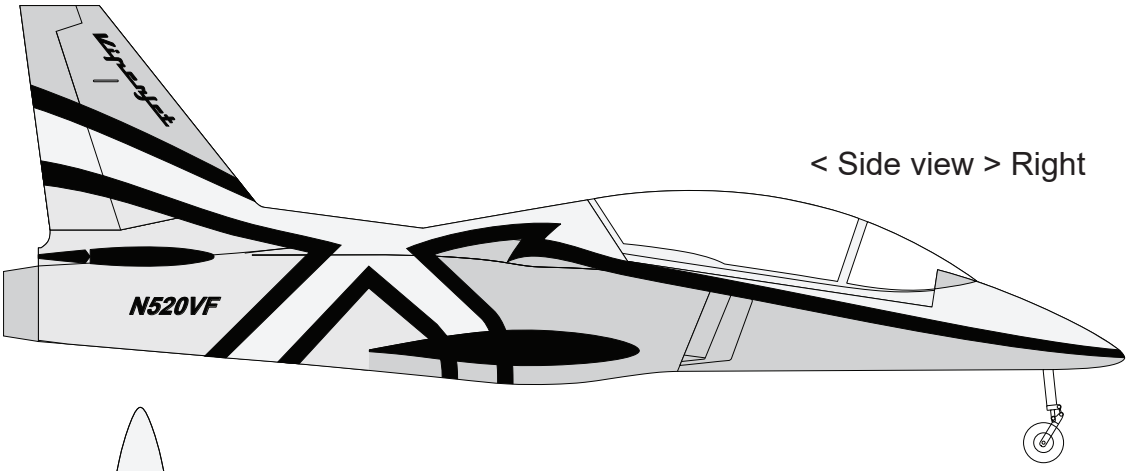

Top view

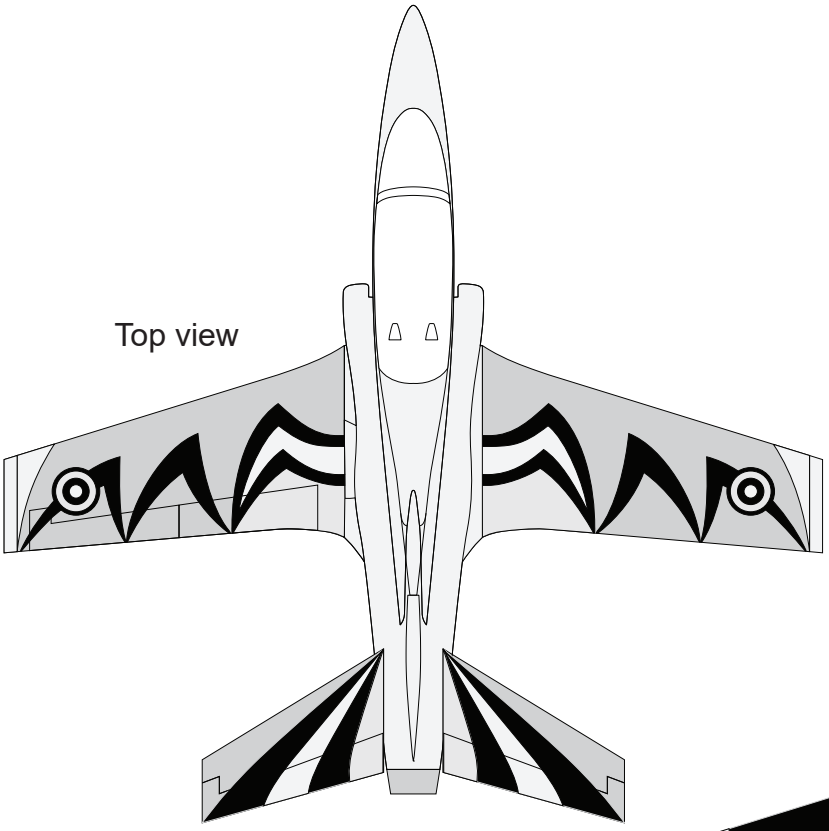

Bottom view

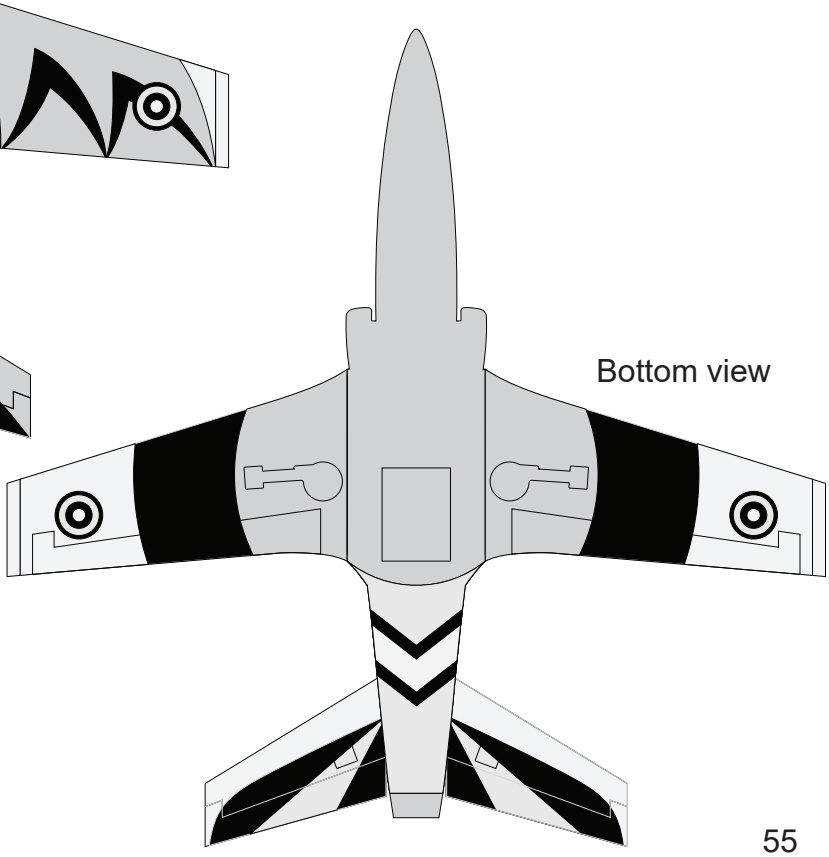

EXPLODED VIEW

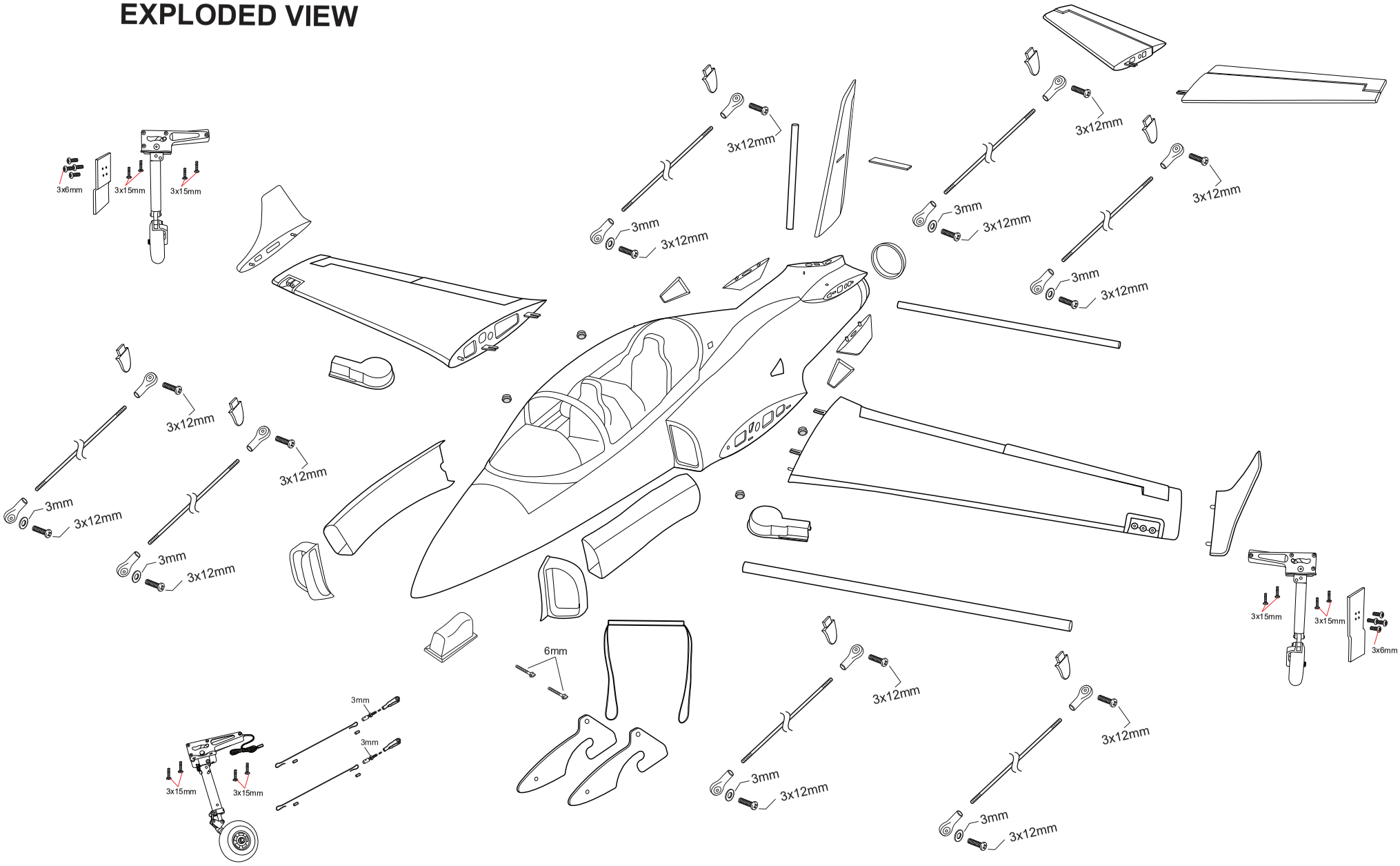

I/C FLINGT WARNINGS

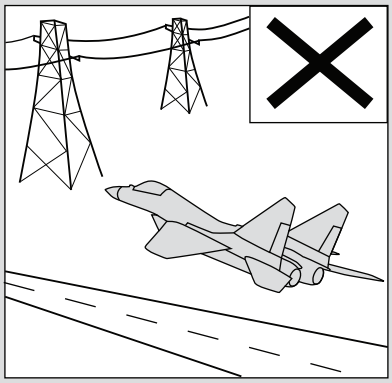

NEVER fly near power lines, aerials or other dangerous areas including airports, motorways etc.

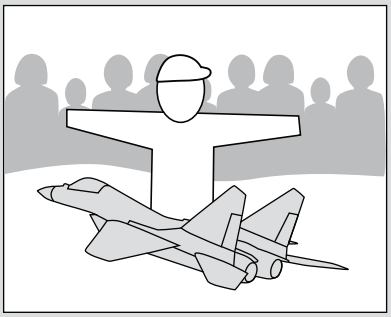

Keep all onlookers (especially small children and animals) well back from the area of operation. This is a flying aircraft, which will cause serious injury in case of impact with a person or animal.

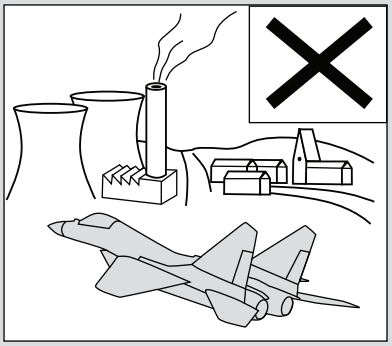

Always operate in open areas, away from factories, hospitals, schools, buildings and houses etc. **NEVER** fly your aircraft close to people or built up areas.

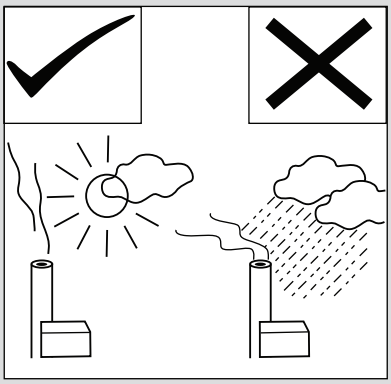

NEVER fly in wet conditions or on windy or stormy days.

Made in Vietnam