EXTREME FLIGHT EXTRA 300 92" 70CC

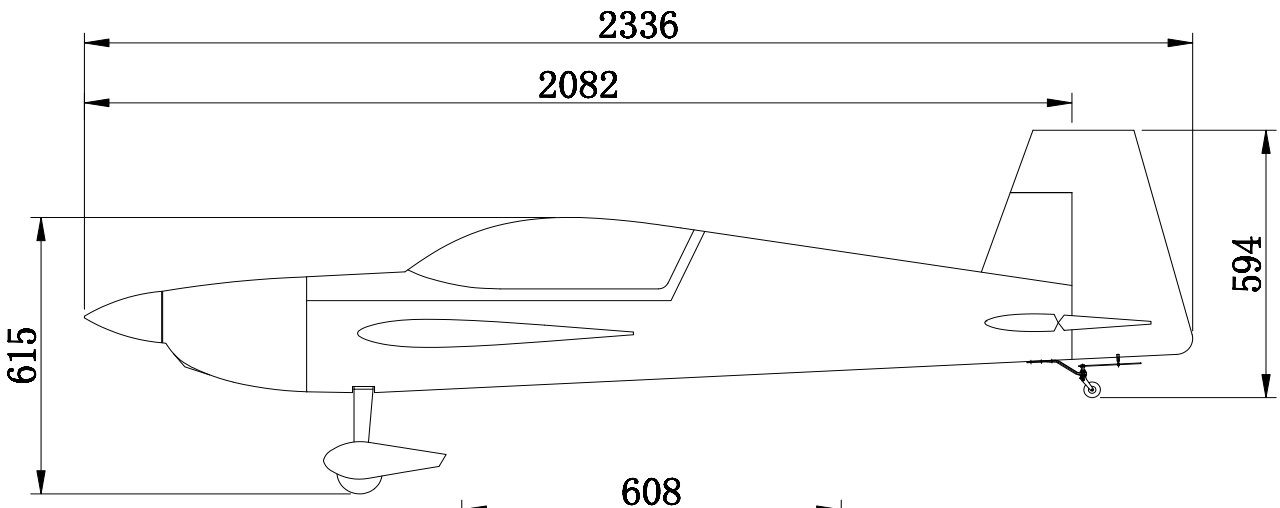

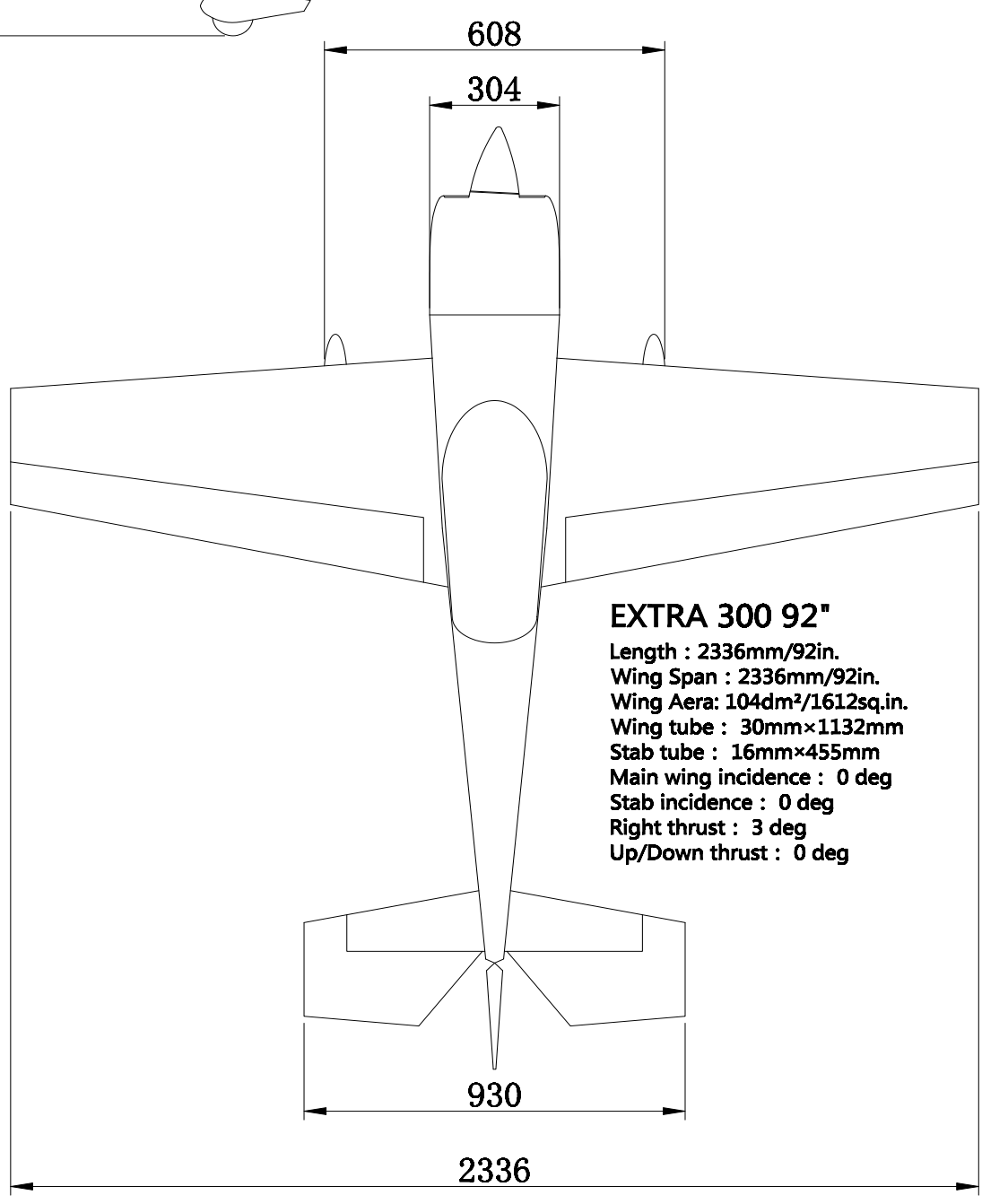

EXTRA 300 92"
Length : 2336mm/92in.
Wing Span : 2336mm/92in.
Wing Aera: 104dm²/1612sq.in.
Wing tube : 30mm×1132mm
Stab tube : 16mm×455mm
Main wing incidence : 0 deg
Stab incidence : 0 deg
Right thrust : 3 deg
Up/Down thrust : 0 deg

SPECS

Wingspan: 92 inches
Length: 90 inches
Wing Area 1500 sq. in.
Weight: 19 to 21 lbs.
Center of Gravity: Center of wing tube.

Spinner: 4.5" (Included)
Pilot: 180mm Short (Included)

CONTROL SETTINGS:
Aileron: Low: 20 deg up, 20 deg down 18-20% exponential
High: 38 deg up, 37 deg down 50-60% exponential
Elevator: Low: 10-12 deg 18-20% exponential
High/3D: 50-55 deg 50-60% exponential
Rudder: Low: 20 deg 50-60% exponential
High: 45+ deg 60-80% exponential

POWER SYSTEM:
GP-76
Desert Aircraft DA 70cc
Blazing Star DA 70 stand-off
FlowMaster 24 oz. fuel tank
Header Drop: MTW 60mm Y header
MTW-TD-110H Rear exit canister
IBEC circuit to power ignition
24x9, 24x10, 25x9 prop based on engine/exhuast

ELECTRIC:
XWorks 70cc Combo, TMOTOR AM910 Combo
If purchased seperately, Blazing Star XL Standoff or TMotor AM910 Standoff
24x12, 25.5x13 electric prop

SERVOS:
5 x Savox SB2290SG (Surfaces)
5 x Savox SV280SGP (Surfaces)
5 x Savox SV1270TGP(Surfaces)
1 x Savox 2262 (Throttle)

SERVO ARMS:
2x Extreme Flight 1.5" single servo arms (tapped 3mm) for Ailerons
2 x Extreme Flight 2" single servo arms (tapped for 3mm) for Elevators
1 x Extreme Flight 2" servo arm (tapped for 3mm) for Push-Pull
1 x Extreme Flight 1" servo arm (tapped for 3mm) for Throttle

SERVO EXTENSIONS:
4 x Extreme Flight 20 AWG 6" OR QTY 2 MPX Single Plug for Ailerons
2 x Extreme Flight 20 AWG 48" for Elevators
1 x Extreme Flight 20 AWG 36" for Rudder
1 x Extreme Flight 20AWG 12" for Throttle

COVERING:

Oracover colors	Ultracote colors
Blue/White Scheme	
Ferrari Red 23	True Red HANU866
Dark Blue 52	Midnight Blue HANU885
White 10	White HANU885
Sky Blue 53	Sky Blue HANU875
Red/White Scheme	
Red 20	Deep Red HANU871
White 10	White HANU885
Ferrari Red 23	True Red HANU866
Black 71	Black HANU874

EXTREME FLIGHT

modellmarkt24.ch