Function Switch **SP 06**

The switch SP 06 has been specifically designed for switching purposes of auxiliary functions such as on board glow plug heating systems and miscellaneous lighting systems etc. in model airplanes, model ships and model cars. The switched loads can be of ohmic, inductive or capacitive character. The switching instant is signalled by flash on of a LED.

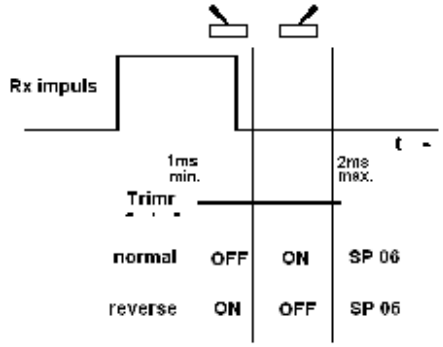

By a shorting plug (jumper) the SP 06 switch can be adjusted to a „normal“ or „reverse“ condition. In the „reverse“ condition the switch reverses its switching sense. If the switch with the jumper at „normal“ position was in the „ON“ state, after replacing the jumper to the „reverse“ position with the same control pulse and adjustment trimmer setting, it will change to the „OFF“ state.
By means of the built in trimmer the switching instant can be adjusted in dependence on the incomming receiver control pulse.

Installation:

- apply only new high quality connectors, which must be soldered properly to the input and output cables of the switch (look out for remnants of solder flux on the connectors)
- connect the JR connector to the receiver output you want to use for controlling the switch (the controlling part of the SP 06 switch obtains its current supply from the receiver)
- switch on the transmitter and receiver in order to set up the switching instant of the switch without load, a LED indicates the ON anf OFF states of the switch (LED alight – SP is ON)
- by means of the trimmer and the respective control element of the transmitter you may adjust the switching instant
- with the jumper position choose the ON or OFF function in accordance with the Tx control element position
- connect the load to the switch output cables with the + - marks
- connect the switched voltage to the inputs with the marks + - on the ACCU side (watch the correct polarity of the battery)
- check the switching function

Technical data:	**SP 06**	**SP 06 OPTO**
Switched input voltage	0 – 16 V (1 – 10 NiXX / 1 – 3 LiXX)	3,5 – 16 V (3 – 10 NiXX / 1 – 3 LiXX)
Resistance in conducting state	0,005 Ohm	0,005 Ohm
Pulsating current (30 sec.)	10 A	10 A
Steady current	6 A	6 A
Supply voltage range of control section	3,5 – 8,4 V	3,5 – 8,4 V
By trimmer adjustable switching range	1 ms to 2 ms	1 ms to 2 ms
Operational temperature range of switch	-10 to +70 °C	-10 to +70 °C
Weight (without cables)	9 g (3g)	9 g (3g)
Dimensions	27 x 15 x 5 mm	27 x 15 x 5 mm

For this product we grant a warranty of 24 months from the day of purchase under the assumption, that it has been operated in conformity with these instructions at recommended voltages and that it has not been damaged mechanically. Warranty and post warranty service is provided by the manufacturer.

JETI model s.r.o., Lomená 1530, 742 58 Příbor, Czech Republic, Phone:+420 556 810 708
www.jetimodel.cz

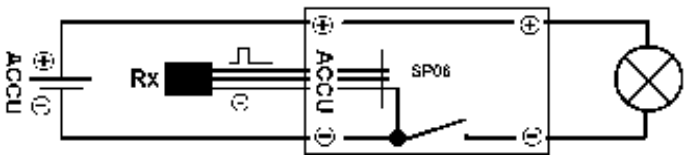

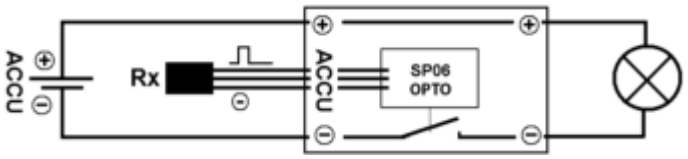

www.modellmarkt24.ch