AXIAL®

QUICKSTART GUIDE

SCX30 1/30th SCALE 4X4 ROCK CRAWLER RTR

1283098
Created 5/26

HORIZON® HOBBY

www.modellmarkt24.ch

1. Remove the Body

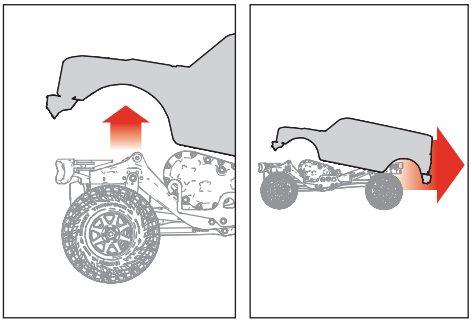

2. Remove the Vehicle Battery

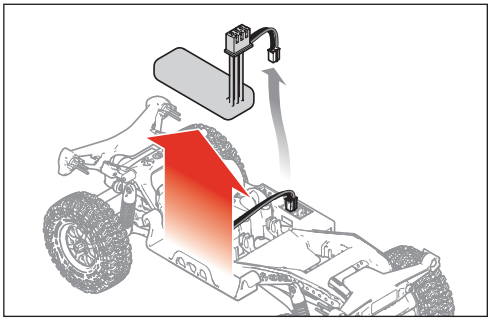

3. Charge the Vehicle Battery

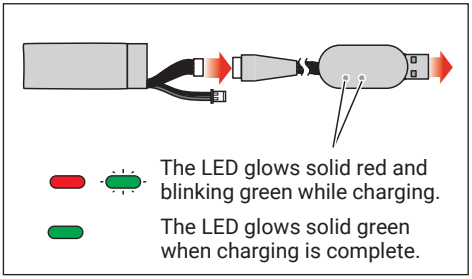

4. Reinstall the Vehicle Battery

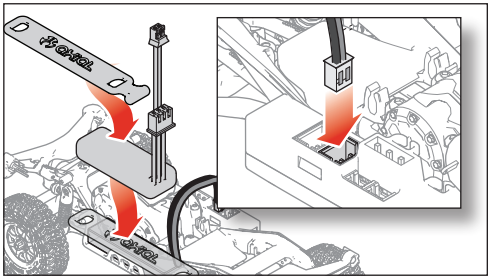

5. Install the Transmitter Batteries

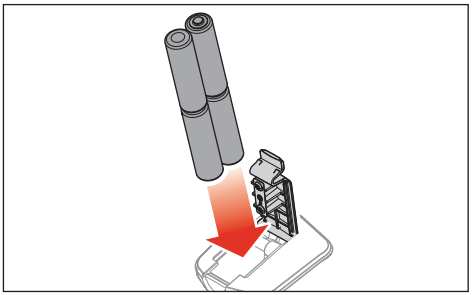

6. Power On the Transmitter

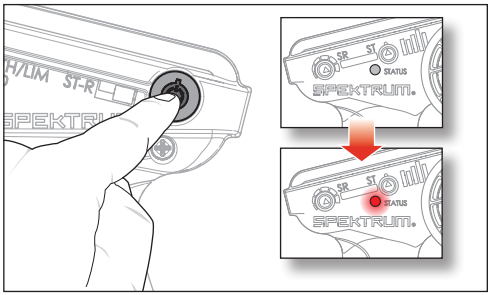

7. Reinstall the Body

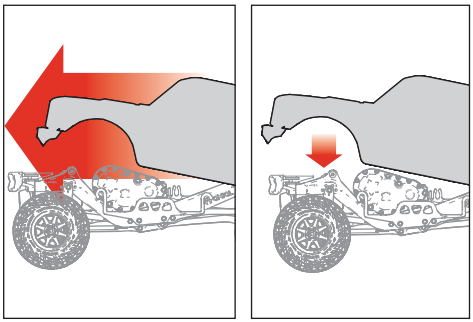

8. Power On the Vehicle

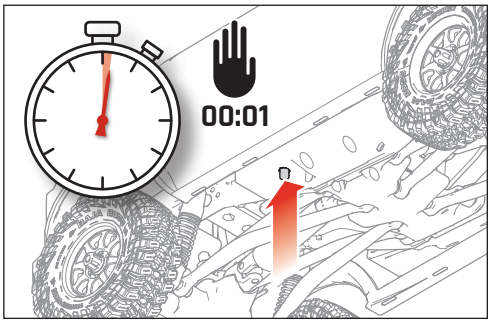

www.modellmarkt24.ch

9. Throttle/Reverse

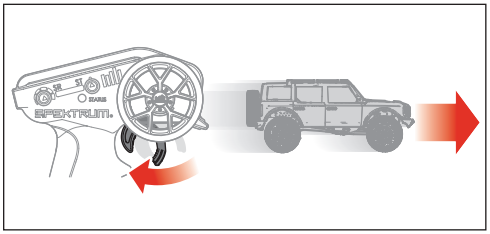

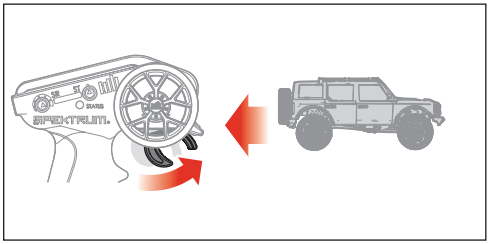

10. Steering

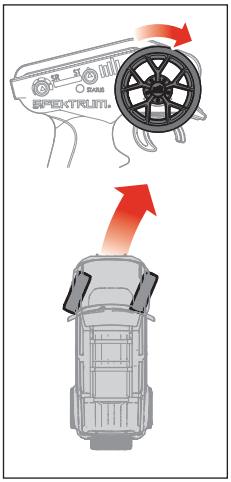

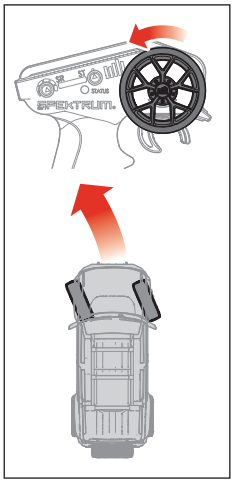

11. Steering Trim

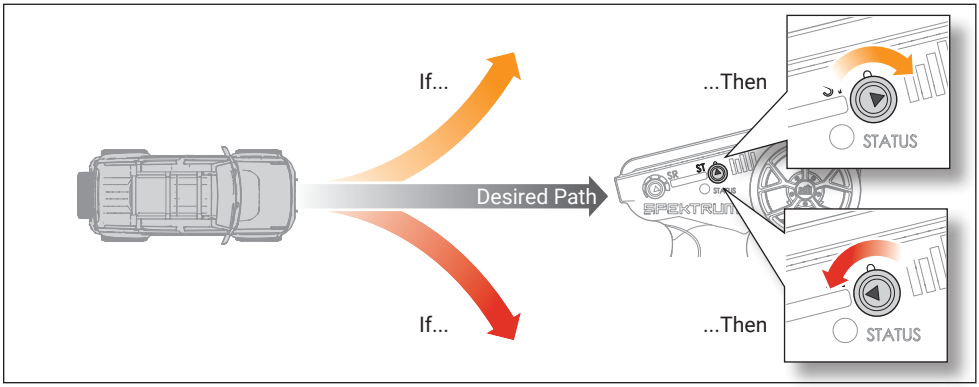

12. Throttle Limiter

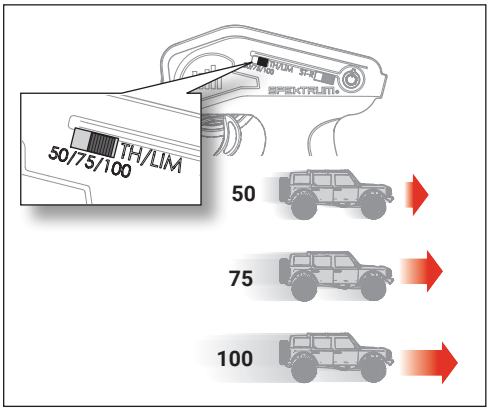

13. Steering Rate

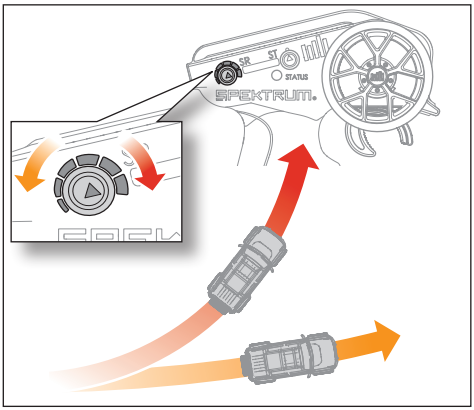

www.modellmarkt24.ch

14. Remove the Body

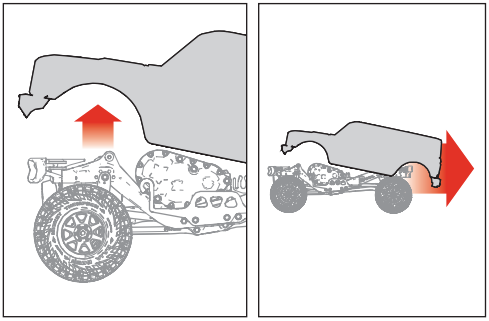

15. Power Off the Vehicle

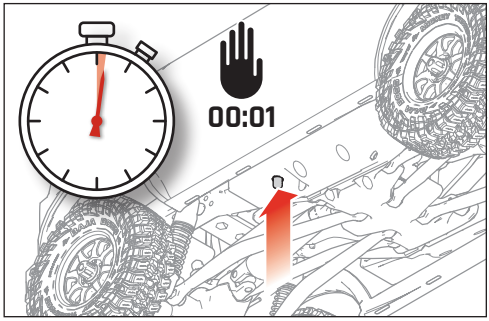

16. Disconnect the Vehicle Battery

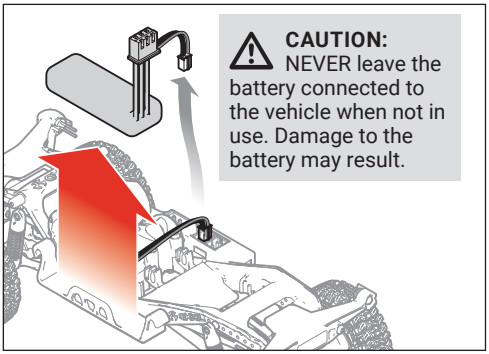

17. Power Off the Transmitter

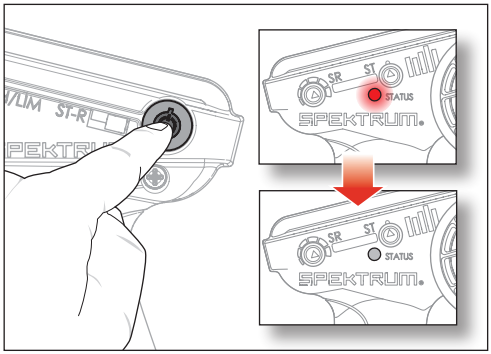

We. Build. Adventure.

facebook.com/axialinc | instagram.com/axialadventure/
twitter.com/axialrc | youtube.com/axialvideos

WWW.AXIALADVENTURE.COM

©2026 Horizon Hobby, LLC. Axial, the Axial logo, SLT2, Firma, SCX30, and the Horizon Hobby logo are trademarks or registered trademarks of Horizon Hobby, LLC. The Spektrum trademark is used with permission of Bachmann Industries, Inc. ©2026 Toyota Motor North America. All rights reserved. Designs of Toyota cars and all other associated marks, emblems and designs are intellectual property rights of Toyota Motor Corporation and used with permission.

US 9,930,567. US 10,419,970. US 10,849,013. Other patents pending.

Created 5/26

1283098

www.modellmarkt24.ch