4TEC DRIFT

NISSAN 240SX

Body Assembly

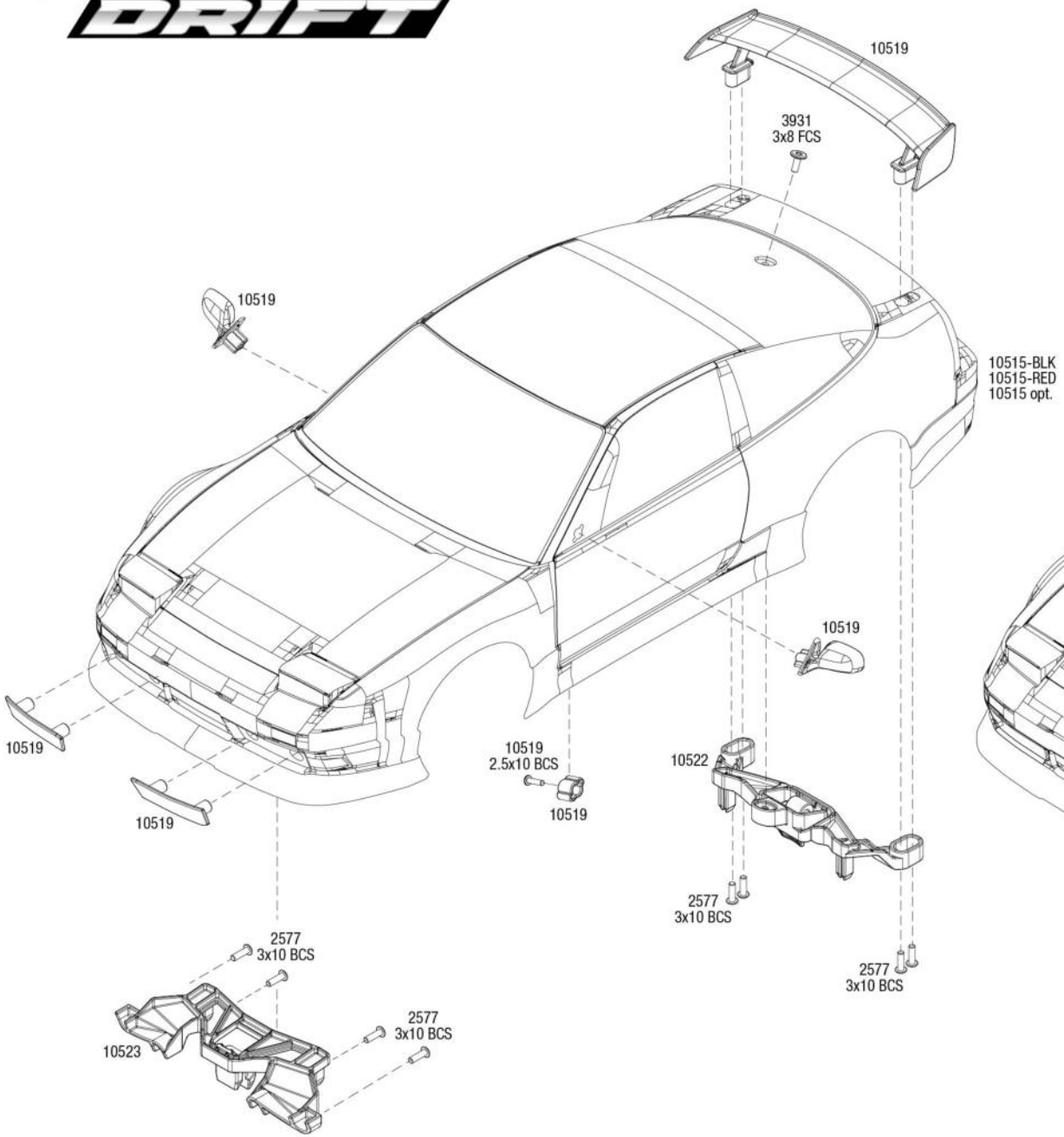

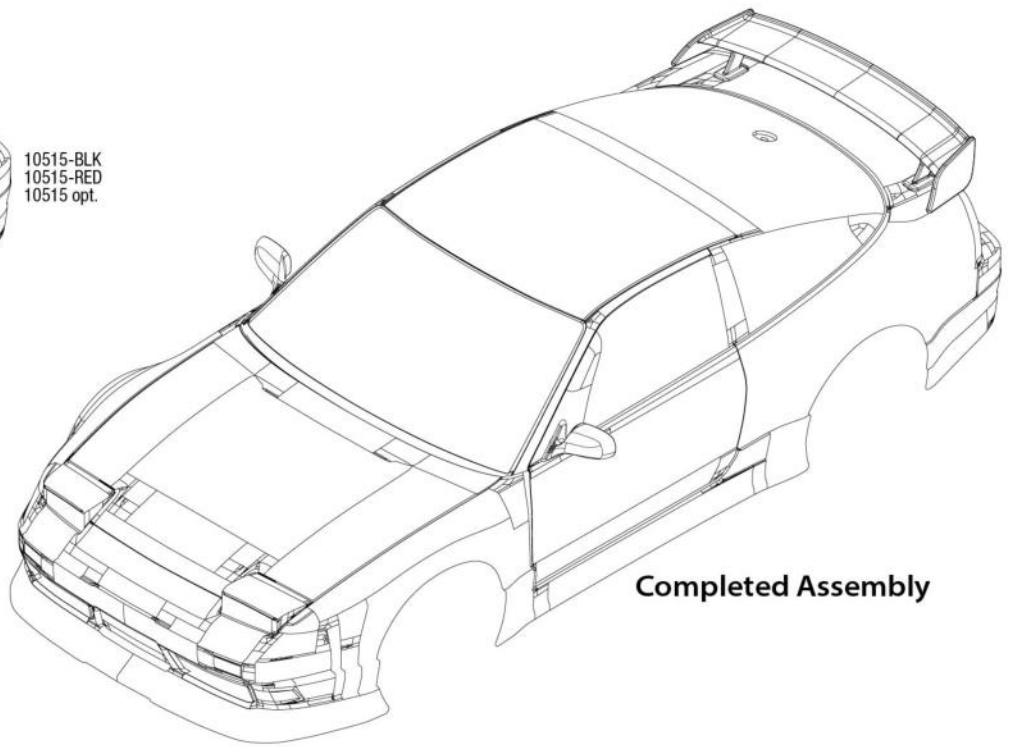

Completed Assembly

REV 251118-R01

See Parts List for a complete listing of optional accessories.

Specifications on this page are subject to change without notice. Every attempt has been made to ensure the accuracy of this drawing; however, Traxxas cannot be held responsible for typographical or other errors.

TRAXXAS

www.modellmarkt24.ch

4TEC DRIFT

NISSAN 240SX

Modular Assembly

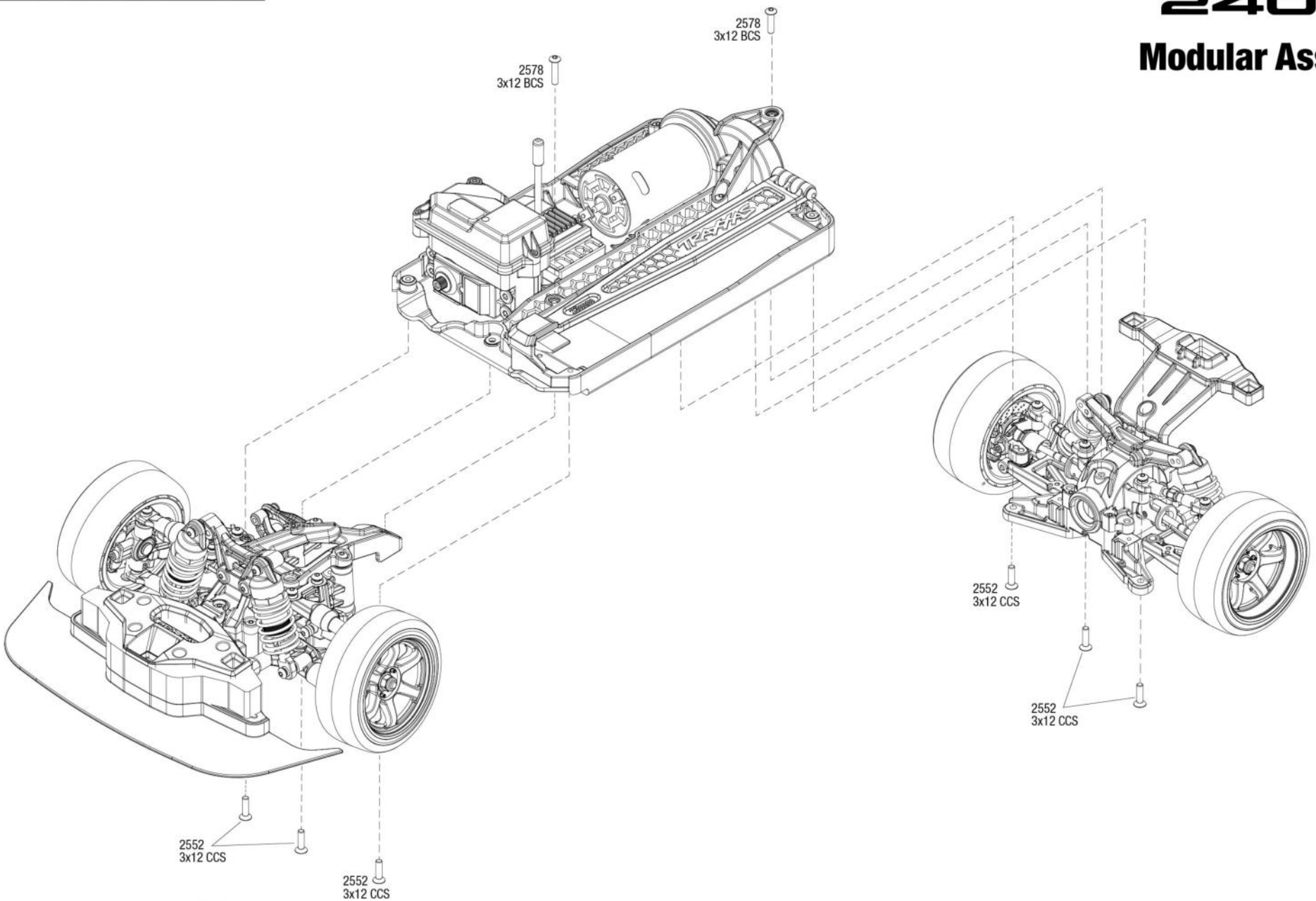

TRAXXAS

Specifications on this page are subject to change without notice. Every attempt has been made to ensure the accuracy of this drawing; however, Traxxas cannot be held responsible for typographical or other errors.

REV 251118-R01

See Parts List for a complete listing of optional accessories.

www.modellmarkt24.ch

4TEC DRIFT

NISSAN 240SX

Chassis Assembly

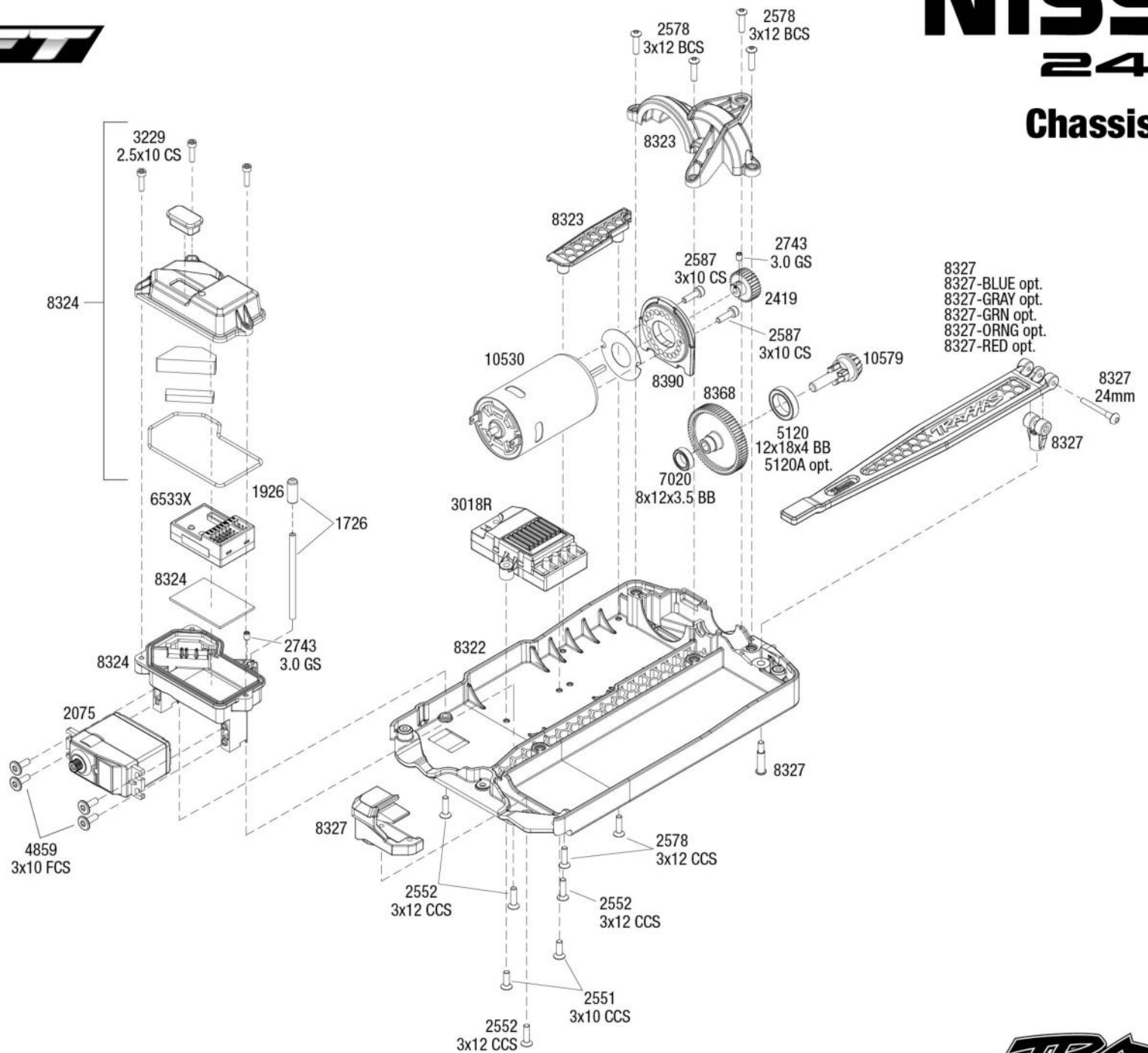

REV 251118-R01

See Parts List for a complete listing of optional accessories.

Specifications on this page are subject to change without notice. Every attempt has been made to ensure the accuracy of this drawing; however, Traxxas cannot be held responsible for typographical or other errors.

TRAXXAS

www.modellmarkt24.ch

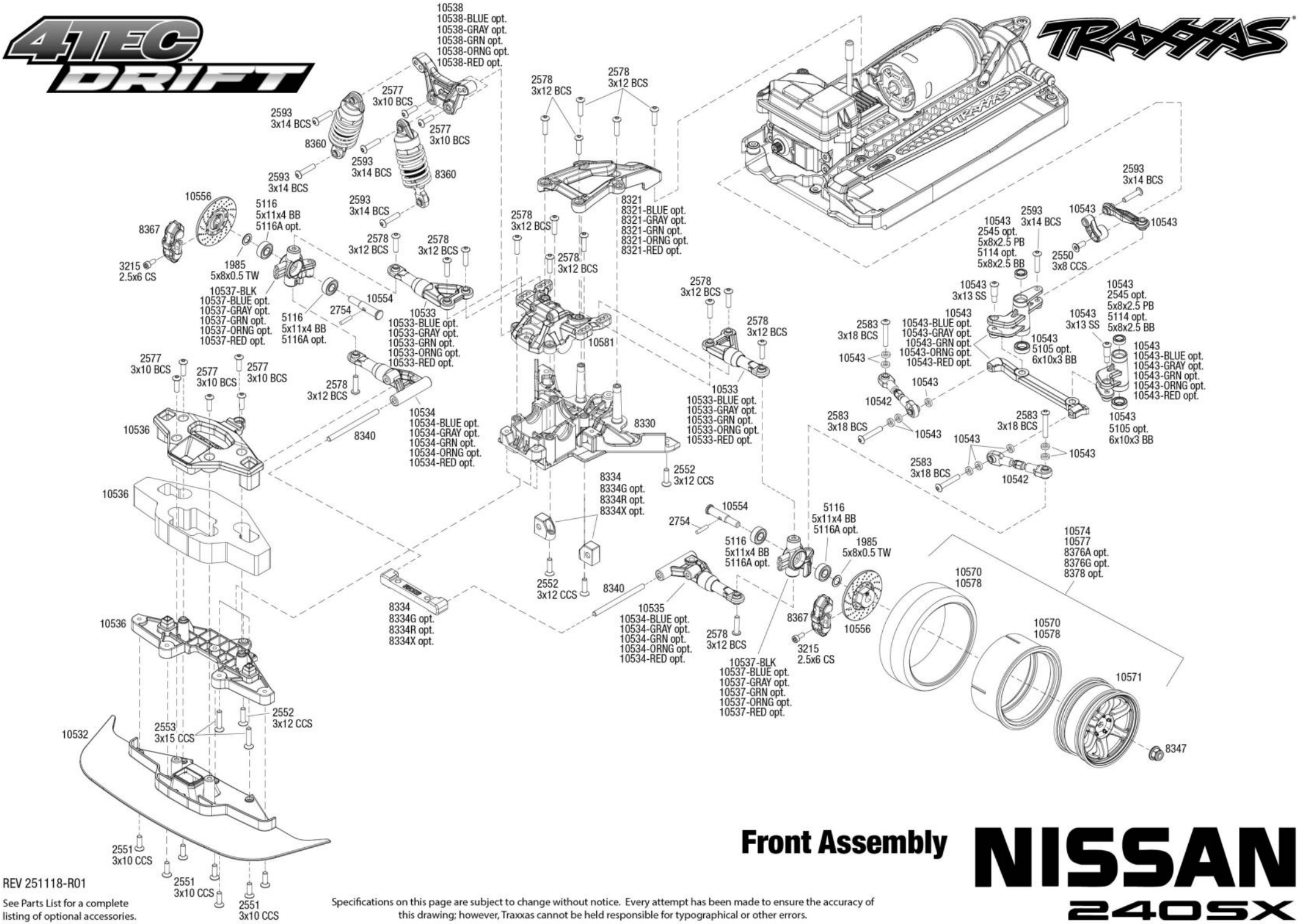

Front Assembly

NISSAN 240SX

REV 251118-R01

See Parts List for a complete listing of optional accessories.

Specifications on this page are subject to change without notice. Every attempt has been made to ensure the accuracy of this drawing; however, Traxxas cannot be held responsible for typographical or other errors.

www.modellmarkt24.ch

NISSAN 240SX

Rear Assembly

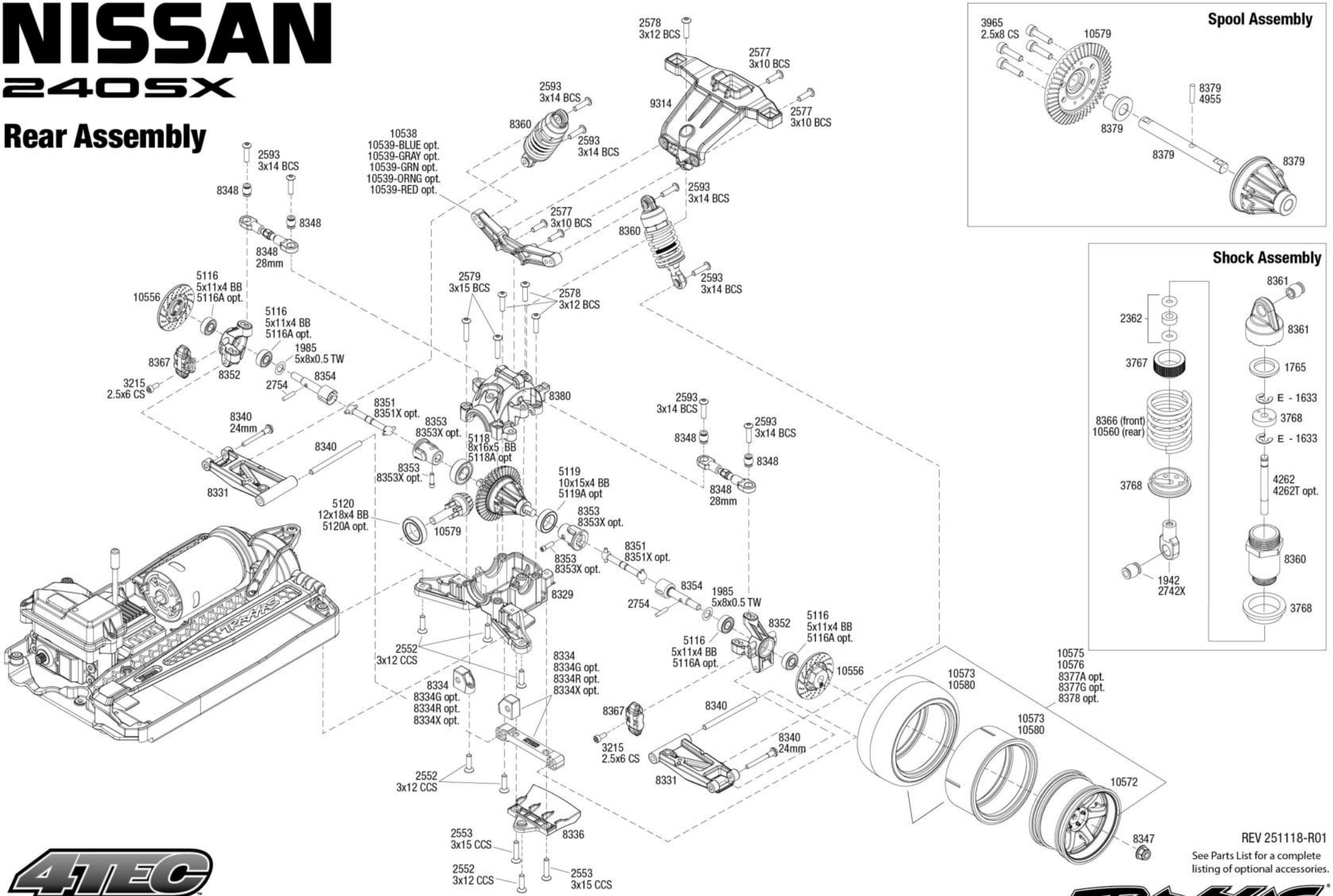

REV 251118-R01

See Parts List for a complete listing of optional accessories.

Specifications on this page are subject to change without notice. Every attempt has been made to ensure the accuracy of this drawing; however, Traxxas cannot be held responsible for typographical or other errors.

www.modellmarkt24.ch