RUSTLER 4X4

Body Assembly

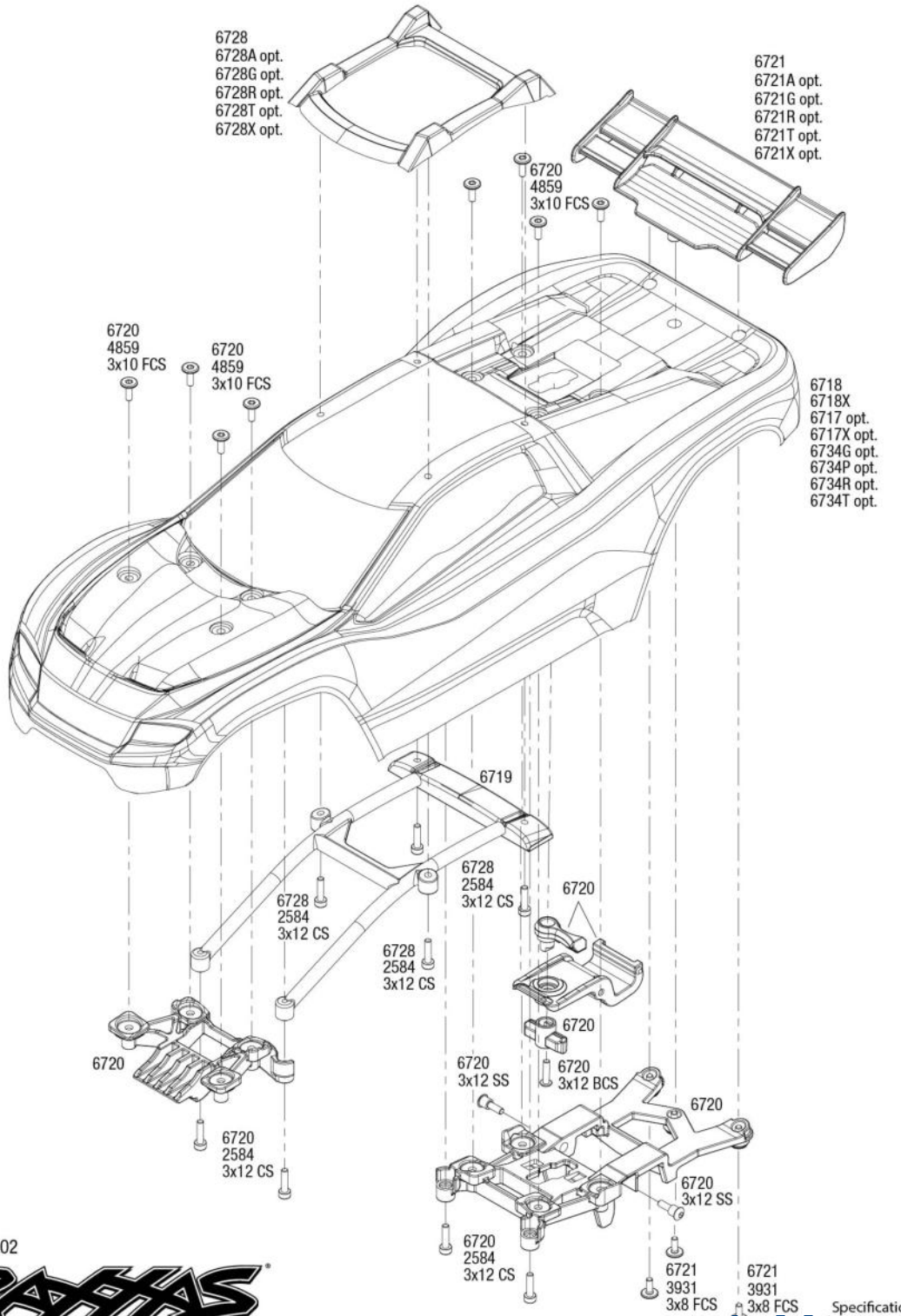

Completed Assembly (view from bottom)

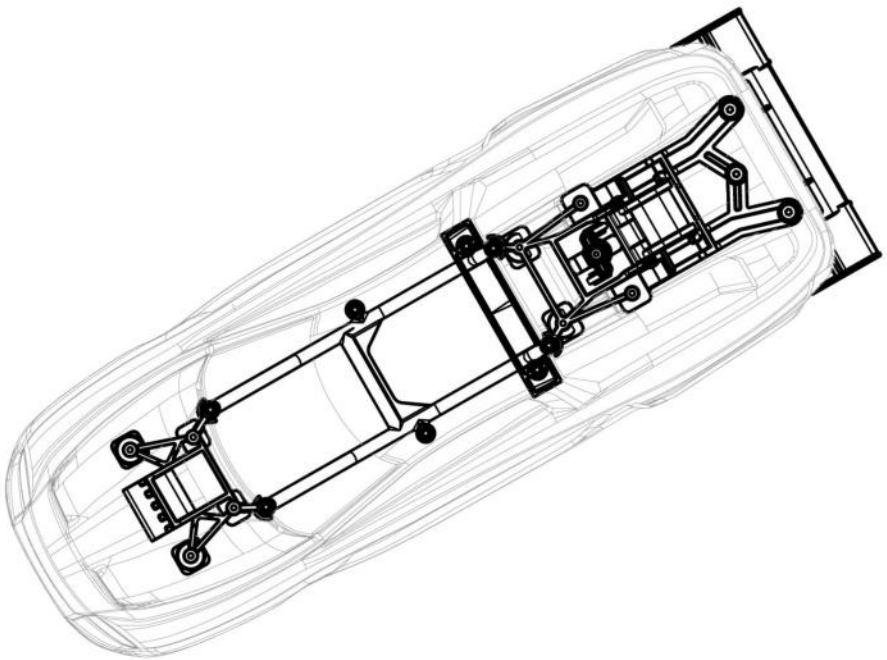

REV 221121-R02

TRAXXAS

Specifications on this page are subject to change without notice. Every attempt has been made to ensure the accuracy of this drawing; however, Traxxas cannot be held responsible for typographical or other errors.

See Parts List for a complete listing of optional accessories.

www.modellmarkt24.ch

RUSTLER 4X4

Chassis Assembly

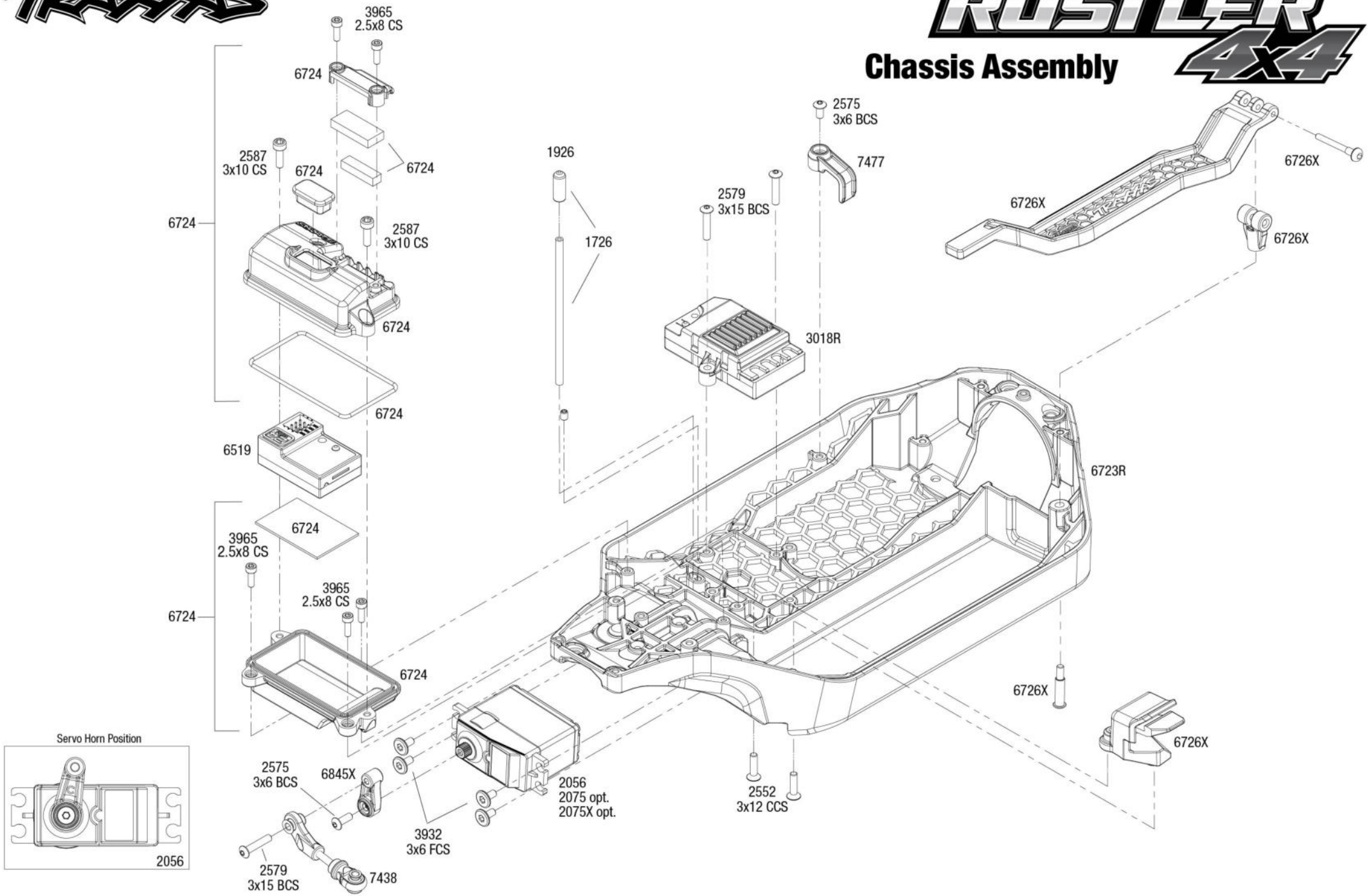

Specifications on this page are subject to change without notice. Every attempt has been made to ensure the accuracy of this drawing; however, Traxxas cannot be held responsible for typographical or other errors.

See Parts List for a complete listing of optional accessories.

REV 221121-R02

www.modellmarkt24.ch

Driveshaft Assembly

Driveshafts

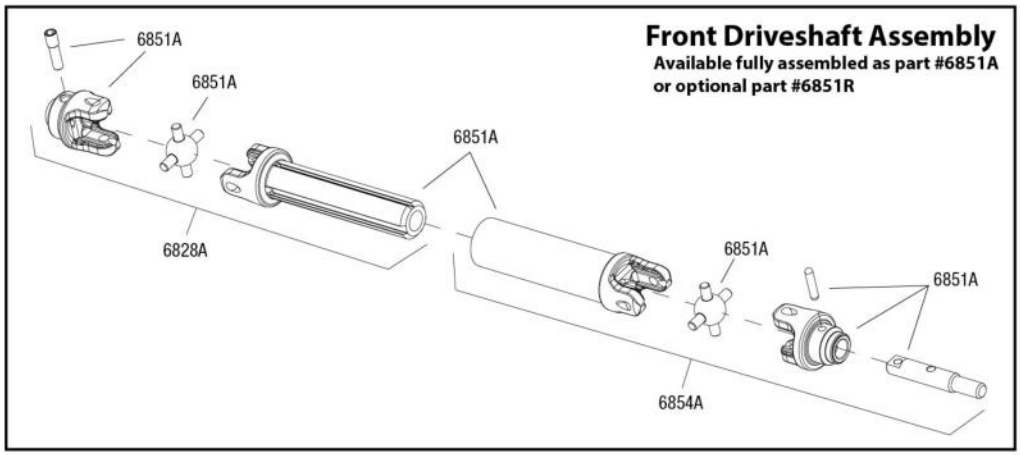

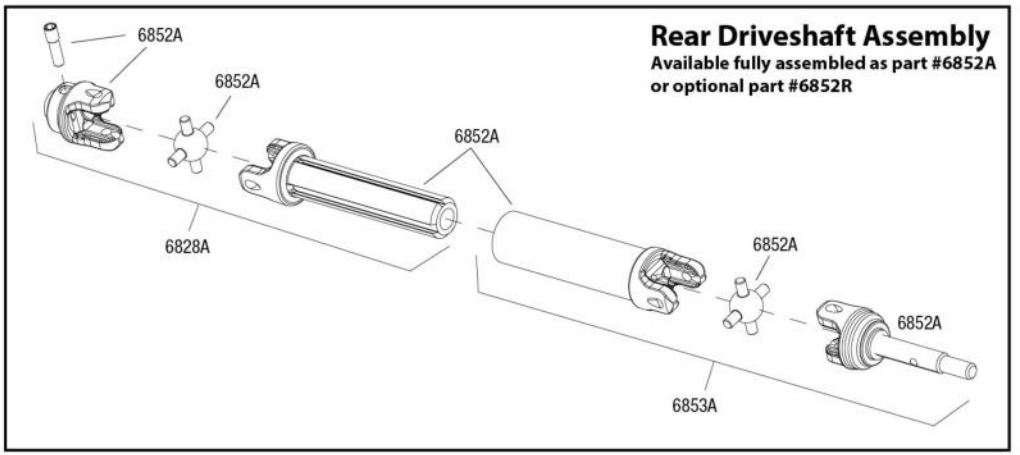

Modular Assembly

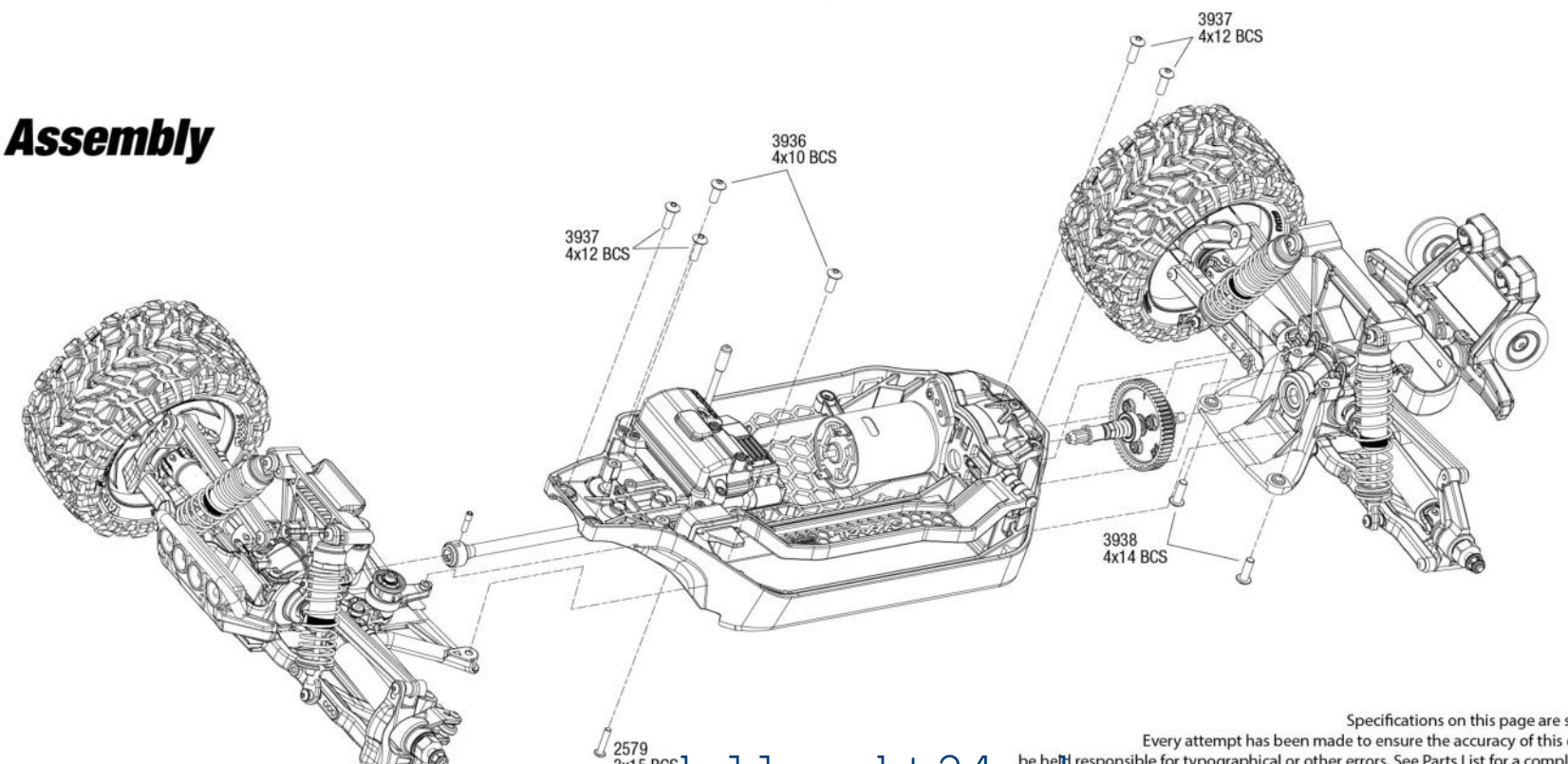

REV 221121-R02

Specifications on this page are subject to change without notice.
Every attempt has been made to ensure the accuracy of this drawing, however Traxxas cannot be held responsible for typographical or other errors. See Parts List for a complete listing of optional accessories.

www.modellmarkt24.ch

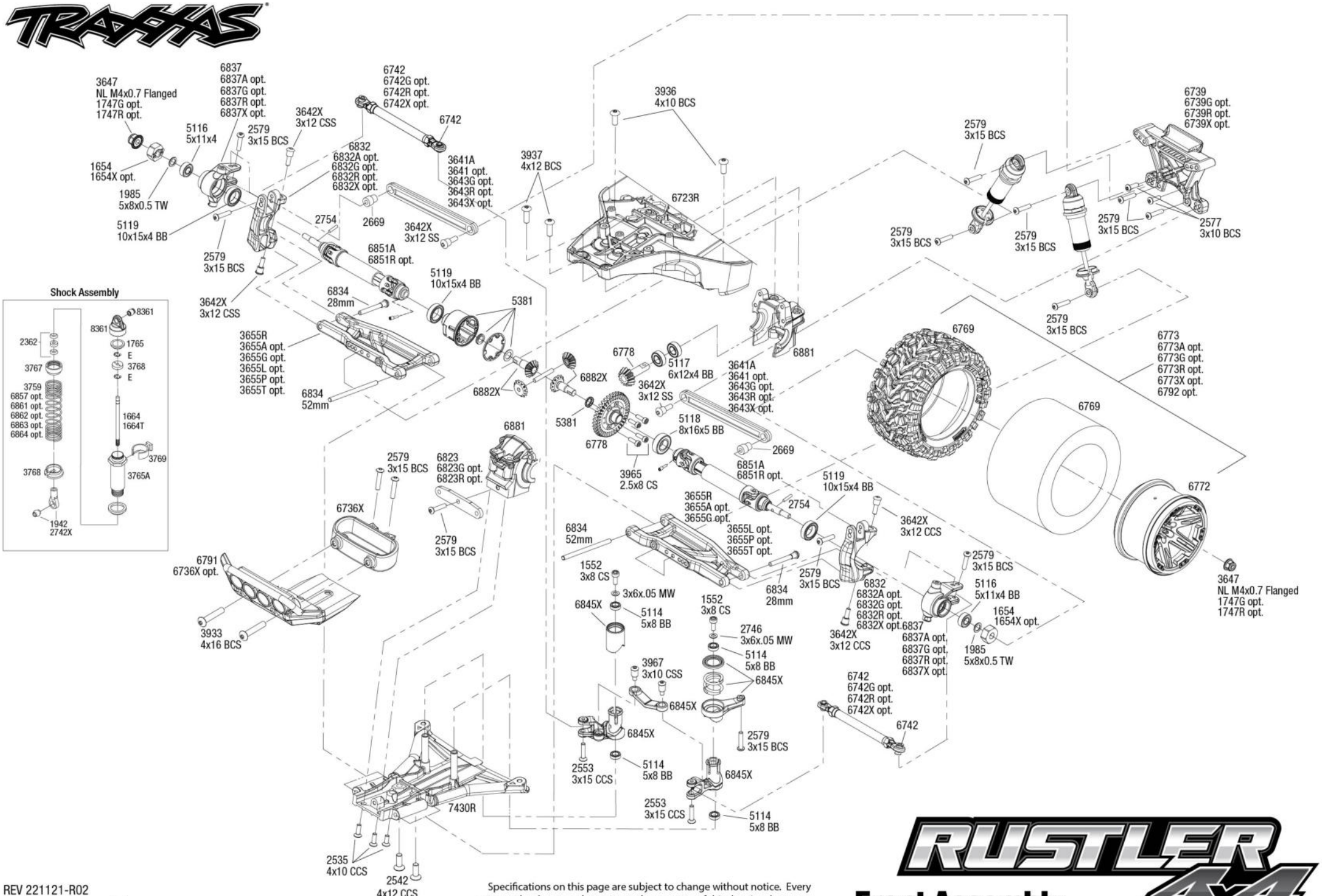

REV 221121-R02

See Parts List for a complete listing of optional accessories.

Specifications on this page are subject to change without notice. Every attempt has been made to ensure the accuracy of this drawing; however, Traxxas cannot be held responsible for typographical or other errors.

RUSTLER 4X4

Front Assembly

www.modellmarkt24.ch

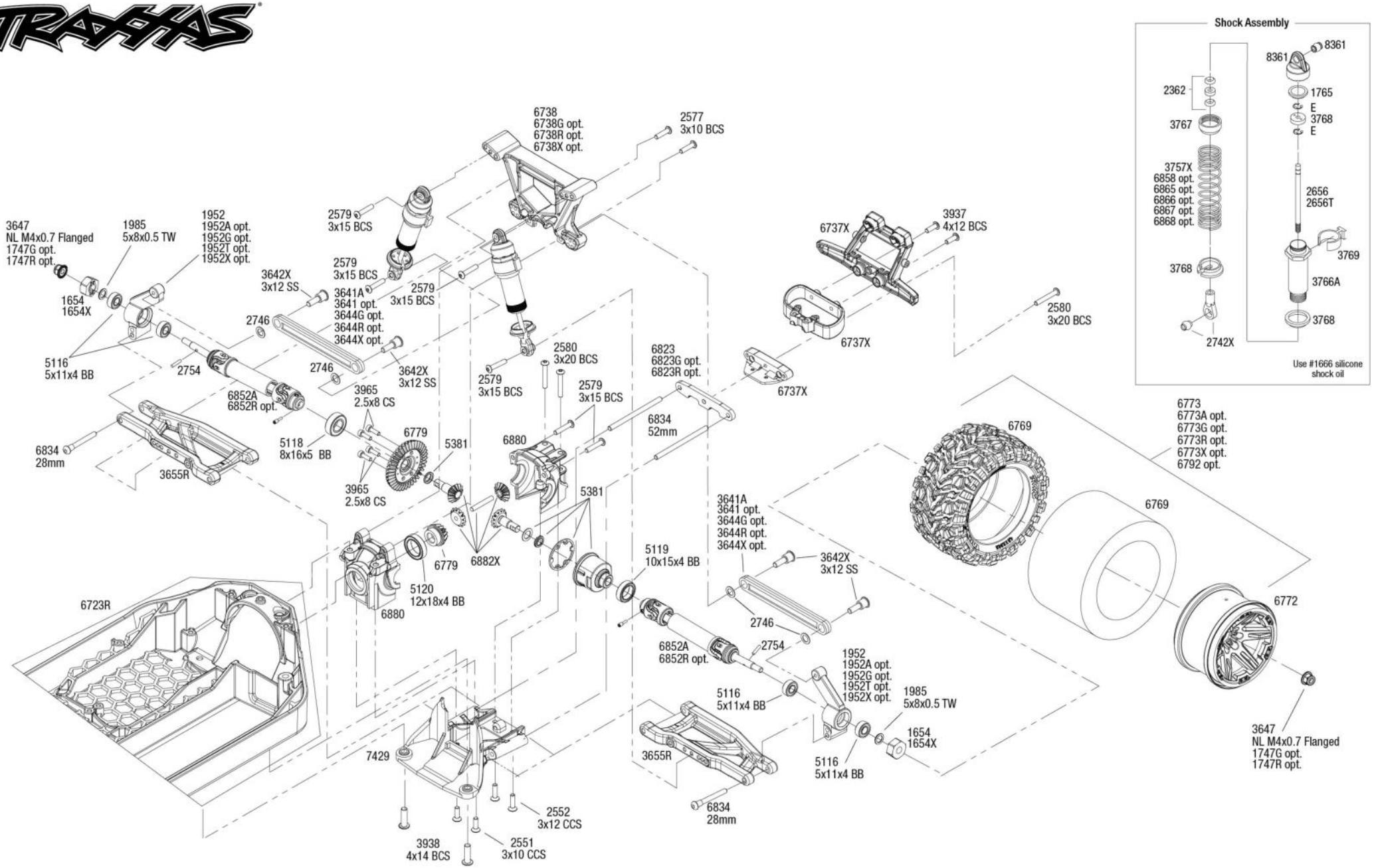

RUSTLER 4X4

Rear Assembly

See Parts List for a complete listing of optional accessories.

REV 221121-R02

Specifications on this page are subject to change without notice. Every attempt has been made to ensure the accuracy of this drawing; however, Traxxas cannot be held responsible for typographical or other errors.

www.modellmarkt24.ch

RUSTLER 4X4

Transmission Assembly

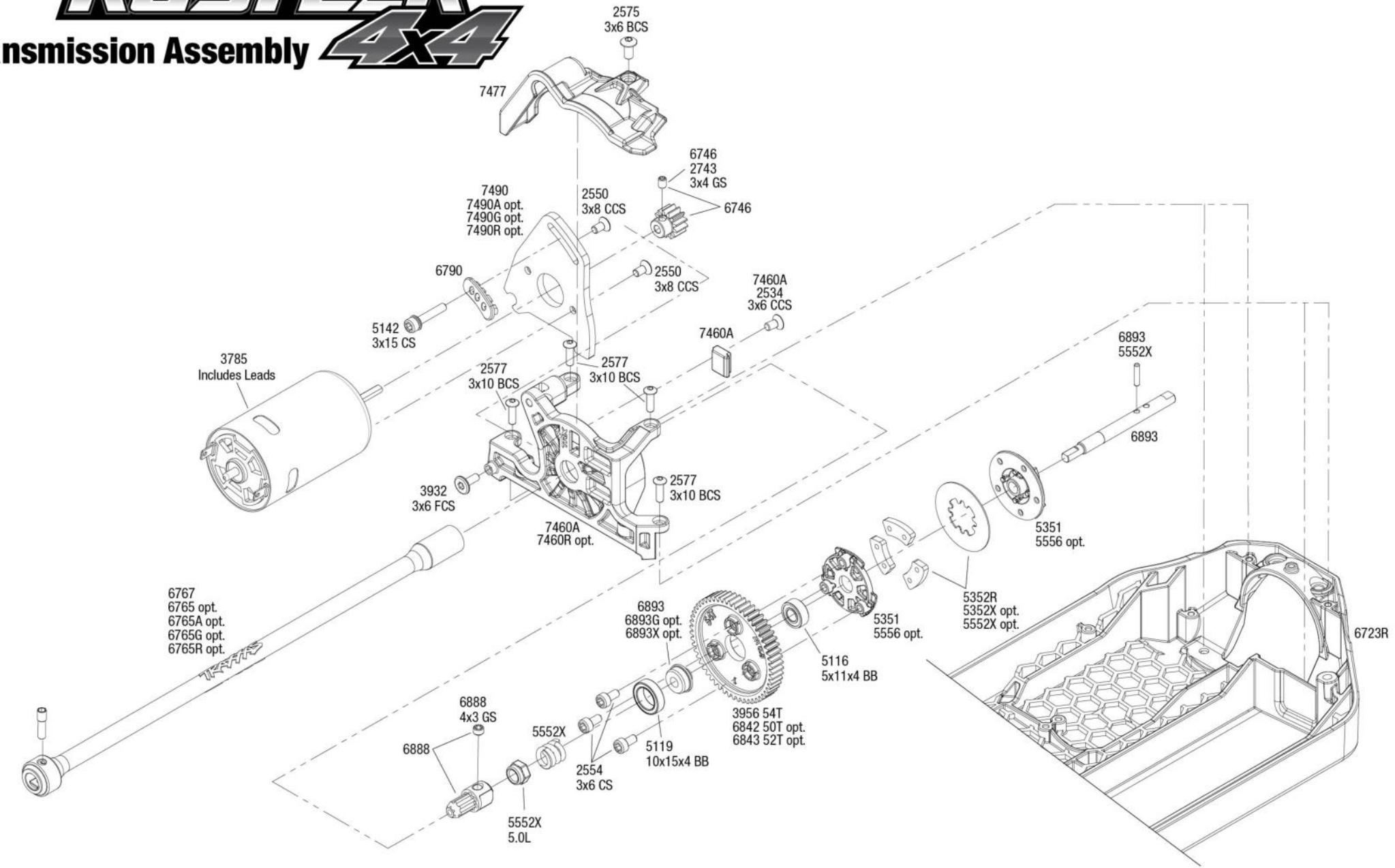

See Parts List for a complete listing of optional accessories.

REV 221121-R02

Specifications on this page are subject to change without notice. Every attempt has been made to ensure the accuracy of this drawing; however, Traxxas cannot be held responsible for typographical or other errors.

www.modellmarkt24.ch